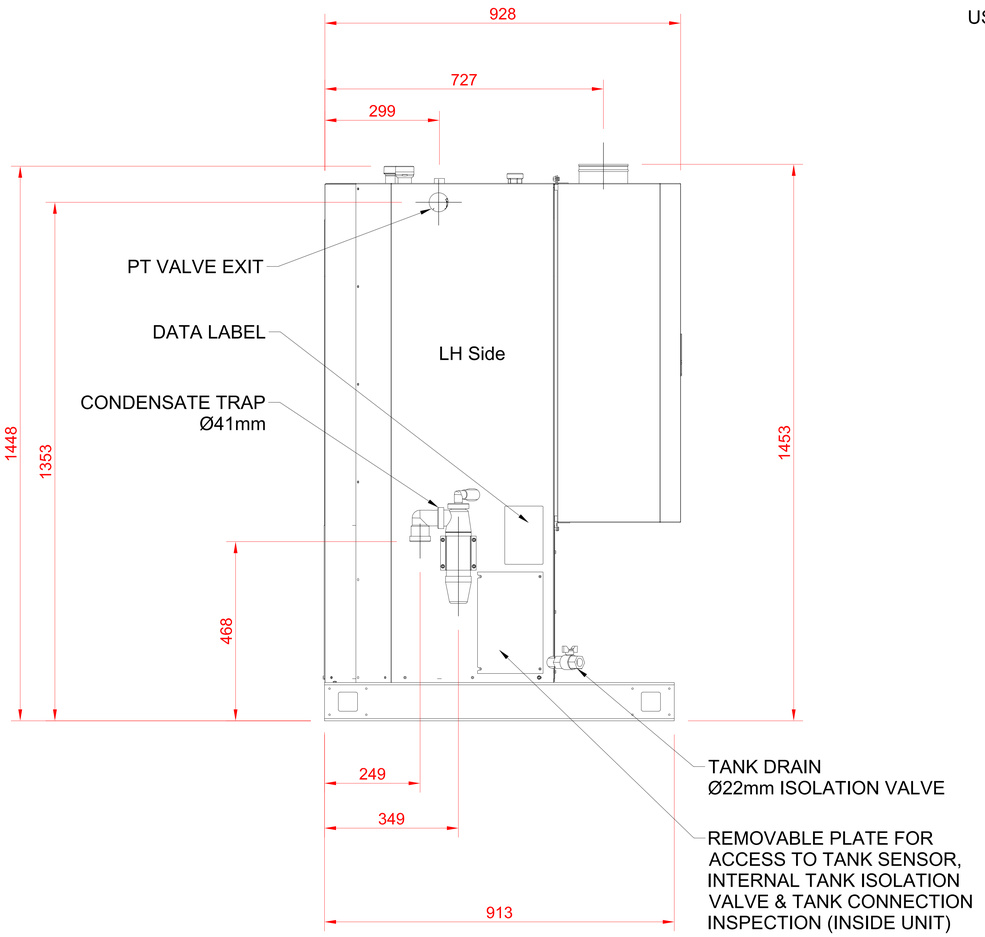

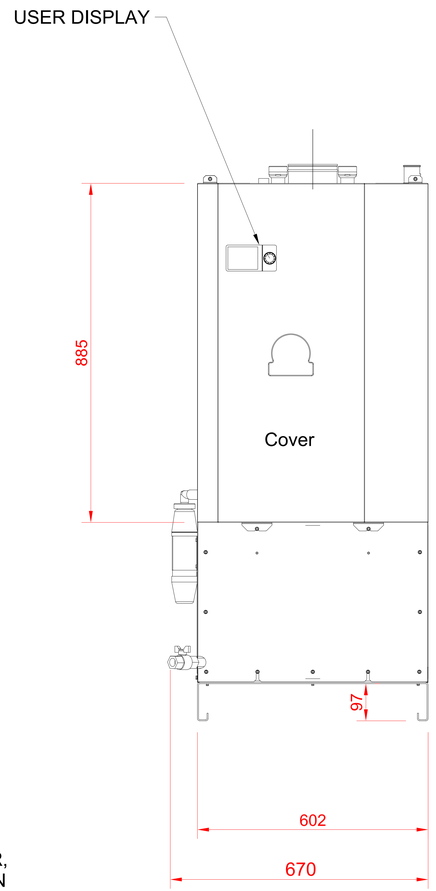

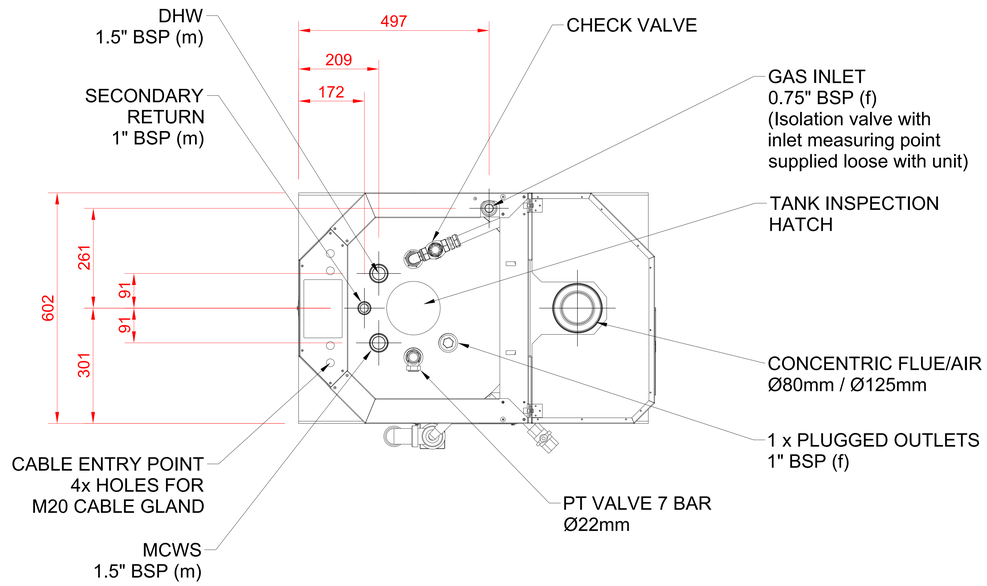

Tolerances:-
3 Decimal Points - +/- 0.5mm
2 Decimal Points - +/- 1.0mm
0 Decimal Points - +/- 5mm

3rd Angle Projection

ECR	Rev	Drn	Description	Date	App

DRG Size	Date	ENG	DRAWN BY	CHKD	APPROVED
A0	XX	XX	XX	XX	XX
	SCALE	Drawing Title		Drawing No.	REV
	n/a	MAXXflo EVO Lite SC25/201		XX	-