ECOflo range - High efficiency condensing storage water heaters for natural gas

EC230/600, EC230/700, EC230/960, EC380/740, EC380/980, EC380/1220, EC380/1400

Please read and understand these instructions before commencing installation and leave this manual with the customer for future reference.

Andrews. Built to perform.

ANDREWS
WATER HEATERS

238-51790-00F REV 7/21

Reproduction of any information in this publication by any method is not permitted unless prior written approval has been obtained from Andrews Water Heaters.

Andrews Storage Water Heaters have been designed and manufactured to comply with current international standards of safety. In the interests of the health and safety of personnel and the continued safe, reliable operation of the equipment, safe working practices must be employed at all times. The attention of UK users is drawn to their responsibilities under the Health and Safety Regulations 1993.

All installation and service on Andrews Water Heaters must be carried out by properly qualified personnel and, therefore, no liability can be accepted for any damage or malfunction caused as a result of intervention by unauthorised personnel.

Andrews Water Heaters' policy is one of continuous product improvement and, therefore, the information in this manual, whilst completely up to date at the time of publication, may be subject to revision without prior notice.

Further information and assistance can be obtained from:

Customer support Monday - Friday 8am - 5pm

Sales: 0345 070 1055
Technical: 0345 070 1057
Email: service@baxicommercialdivision.co.uk
Website: www.andrewswaterheaters.co.uk
Twitter: @andrewsWH

Note
The Andrews Water Heaters covered in this manual are for use with natural gas only

Copyright Andrews Water Heaters 2021

Contents

1 General and safety information 5
1.1 General description 5
1.2 British standards and codes of practice 5
1.3 Health and safety regulations 1993 7
1.4 Effectiveness in combating Legionella 7

2 Technical data 8
2.1 ECOflo Range 8
2.2 Dimensions and clearances 9
2.3 ErP data 10

3 Installation 11
3.1 Introduction 11
3.2 Location 11
3.3 Features 12
3.4 Technical detail 15
3.5 Heat exchanger 16
3.6 Flue system 17
3.7 Water connections 17
3.8 Gas connections 17
3.11 Remove crate 18
3.12 Location 18
3.13 Chemical vapour corrosion 18
3.14 Scalding 19
3.15 Approximate time/temperature scald chart 19
3.16 Gas meter size natural gas only 19
3.17 Gas pressure regulation 19
3.18 Gas supply - Natural gas 20
3.19 Electrical supply 20
3.20 Flue systems 22
3.21 Optional conventional flue (open flue) 22
3.22 Horizontal and vertical flue kits 23
3.23 Flue systems 25
3.23.1 Optional Components for 100/150 mm dia (concentric) Flue 25
3.23.2 ECOflo 380/1900 Horizontal fittings pack – Part No: B343 26
3.23.3 ECOflo 380/1900 Vertical fittings pack – Part No: B345 26
3.23.4 General 26
3.23.5 ECOflo 230 & 380 Litre flue systems 27
3.23.6 ECOflo 230 & 380 Vertical/horizontal flue system 28
3.23.7 Flue systems typical installation 29
3.23.8 Installing the horizontal flue terminal 30
3.23.9 Installing the vertical flue terminal 31
3.24 Air supply and ventilation 33
3.24.1 Concentric flue systems 33
3.24.2 Air vents areas 33
3.25 Water quality and treatment 34
3.26 Water connections 35
3.26.1 Vented systems 35
3.26.2 Unvented systems 36

4 Commissioning 38
4.1 Filling the heater with water 38
4.2 User's safety guide 38
4.3 Air/Gas mixture adjustment 39
4.4 CO^2 Percentage 40

5 Operating instructions 41
5.1 General instructions 42
5.2 Lighting instructions 42
5.3 Temperature adjustment 43
5.4 Burner flame check 44
5.5 Eco (energy cut-off) 44
5.6 Temperature stratification (stacking) 44

5.7 Temperature selection procedure 45
5.8 Burner flame check 50
5.9 Direct spark 51
5.10 Thermostat and high limit 51
6 Servicing 52
6.1 Introduction 53
6.2 Pre-service operations 53
6.3 Annually 54
6.4 General 54
6.5 Maintenance schedule 54
6.6 Correx powered anodes 54
6.7 Flushing water heater 54
6.8 Draining water heater 55
6.9 Filling water heater 55
6.10 Sediment and limescale 55
6.11 To replace a correx anode 56
6.12 Drain valve and tank access panel 56
6.13 Cleaning the storage vessel 57
6.14 Descaling 57
6.15 Restart 57
6.16 Combined temperature/pressure relief valve 58
6.17 Combustion system inspection 58
6.18 Accessing service mode on the water heater display (Service personnel only) 59
6.19 How to reset the control from Lockout conditions 68
6.20 Diagnostic error codes and troubleshooting procedures for Resideo integrated 71
6.21 Procedure for checking thermostat sensors 73
7 Fault finding 74
7.1 Main power light is not on 74
7.2 Thermostat does not call for heat 74
7.3 Ignition module 'Power' LED is not lit 74
7.4 Fan does not energise 74
7.5 Ignitor does not glow 74
7.6 Main valve does not turn on 75
7.7 Burner flame keeps going out 75
7.8 Thermostat does not satisfy 75
7.9 Fan did not post purge 75
8 Parts lists and illustrations (Series C, D & E) 76
8.1 EC230/960, EC230/600, EC230/700, EC380/740, EC380/980, EC380/1220 & EC380/1400 General assembly 76
8.2 EC230/960, EC230/600, EC230/700, LEC230/700, EC380/740, EC380/980, EC380/1220 & EC380/1400 Combustion system assembly 78
8.3 EC230/960, EC230/600, EC230/700, EC380/740, EC380/980, EC380/1220, & EC380/1400 Combustion surround 82
8.4 EC230/960, EC230/600, EC230/700, EC380/740, EC380/980, LEC380/980, EC380/1220 & EC380/1400 Ignition control assembly 84
8.5 Concentric flue component list (100/150mm dia.) 86
8.6 Unvented system kit B290 - Parts list 88
9 Appendix 89
9.1 Dismantling, disposal and recycling 89

1 General and safety information

1.1 General description

The Andrews Water Heater has been designed for use with NATURAL GAS and is manufactured to give an efficient, reliable and long service life.

To ensure the continued, trouble-free operation of your heater at maximum efficiency, it is essential that correct installation, commissioning, operation and service procedures are carried out strictly in accordance with the instructions given in this manual. By law, installation and commissioning of the heater must be carried out by properly qualified personnel.

The heater(s) must be installed in accordance with the following requirements:
The current GAS SAFETY (INSTALLATION AND USE) REGULATIONS
The current BUILDING REGULATIONS
The WATER SUPPLY (WATER FITTINGS) REGULATIONS 1999

Additionally, installation should be performed in accordance with all relevant requirements of the Gas Supplier, Local Authority and recommendations of the British Standards and Codes of Practice detailed below.

1.2 British standards and codes of practice

BS 6700:	Specification for design, installation, testing and maintenance of services supplying water for domestic use within buildings and their curtilages. This standard supersedes the following British Standards and Codes of Practice: CP99, CP310, CP324, 202, CP342 Part 2, Centralised Hot Water Supply.
BS 5440:	Installation of flues and ventilation for gas appliances of rated output not exceeding 60kW.
Part 1:	Specification for installation of flues.
Part 2:	Specification for installation of ventilation for gas appliances.
BS 5546:	Installation of gas hot water supplies for domestic purposes.
BS 6891:	Installation of low pressure gas pipework of up to 28mm in domestic premises.
BS 6644:	Installation of gas fired water boilers of rated inputs between 60kW and 2mW
BS 7206:	Specification for unvented hot water storage units and packages.

BS EN 806: (Parts 1 - 5) Specifications for installations inside buildings conveying water for human consumption.

BS EN 12897: Water supply. Specification for indirectly heated unvented (closed) storage water heaters.

IGE/UP/1A,1B: Strength/tightness testing and direct purging.

IGE/UP/2: Installation pipework.

IGE/UP/10 - 1 (Edition 4): Installation of gas appliances in industrial and commercial premises.

Note
Consideration should be given to amendments or updates to the above standards.

1.3 Health and safety regulations 1993

It is the duty of manufacturers and suppliers of products for use at work to ensure, so far as is practicable, that such products are safe and without risk to health when properly used, and to make available to users adequate information about their safe and proper operation.

Andrews Water Heaters should only be used in the manner and purpose for which they are intended and in accordance with the instructions in this manual. Although the heaters have been manufactured with paramount consideration to safety, certain basic safety precautions highlighted in this manual must be observed by the user.

It is imperative that all users of the heaters must be provided with all the information and instruction necessary to ensure correct and safe operation.

1.4 Effectiveness in combating Legionella

Water systems in buildings have been associated with outbreaks of Legionnaires' Disease, particularly in health care facilities where occupants are significantly more susceptible to infection.

In recognition of the risks in hospitals, a Code of Practice for the Control of Legionella in Health Care premises has been issued by the Department of Health (1991). Codes of Practice applicable to other premises have been published by other organisations, principally the Health and Safety Executive (HS)(G70) and the Chartered Institute of Building Services Engineers (CIBSE, TM13). All Codes of Practice draw attention to the design and operation of water systems with reference to avoidance of factors that favour colonisation by Legionella bacteria. These factors include stagnation, lukewarm conditions (20°C to 45°C) and the accumulation of debris, scale and corrosion in the base of tanks and calorifiers.

Andrews Water Heaters have commissioned an independent evaluation of their products to investigate their resistance to build-up of Legionella bacteria.

Experiments were conducted to determine whether, following a substantial challenge by legionella pneumophilia. After overnight and stagnation, the system was rendered free from viable recoverable legionella. It was found that at 61°C, following a challenge of approximately 107 organisms per litre, within one hour, more than 99.999% of organisms had been killed. After a subsequent stagnation period, sampling did not reveal any residual contamination. The design of the base of the water heater precludes legionella colonisation, even after build-up of debris. The burner positioning ensures that the water at the bottom of the heater reaches the same, or higher, temperatures as in the rest of the heater.

Based on data obtained through experiment, the Andrews Water Heater can be described as legionella resistant as it is considered unlikely that, at the temperature tested, the organism would colonise the water heater and present a possible health risk.

2 Technical data

2.1 ECOflo Range

Model Reference – Natural Gas	EC230/600	EC230/700	EC230/960	EC380/740	EC380/980	EC380/1220	EC380/1400
Natural gas, category 1²H							
Gas consumption G20	3.41m³/h	4.09m³/h	5.43m³/h	4.09m³/h	5.43m³/h	6.82m³/h	7.92m³/h
Heat input gross	36.6 kW	43.9 kW	58.3 kW	43.9 kW	58.3 kW	73.2 kW	85.0 kW
Heat output	35.1 kW	41.3 kW	54.2 kW	43.0 kW	57.1 kW	71.0 kW	79.1 kW
Supply pressure	20 mbar	20 mbar	20 mbar	20 mbar	20 mbar	20 mbar	20 mbar
Gross thermal efficiency (NG)	96%	94%	93%	98%	98%	97%	93%
Technical details (NG) **NOx Level**	45mg/kW	40mg/kW	40mg/kW	55mg/kW	40mg/kW	40mg/kW	55mg/kW
Noise level (a)	51dBA	51dBA	51dBA	51dBA	51dBA	51dBA	51dBA
Recovery rate thru' 50°C	600 ltrs/hour	700 ltrs/hour	960 ltrs/hour	740 ltrs/hour	980 ltrs/hour	1220 ltrs/hour	1400 ltrs/hour
Storage recovery time @ 50°C rise	23 mins	20 mins	14 mins	31 mins	23 mins	19 mins	16 mins
Concentric flue size (b)	100/150mm	100/150mm	100/150mm	100/150mm	100/150mm	100/150mm	100/150mm
Maximum flue run (concentric) (b)	16 metres	16 metres	16 metres	16 metres	16 metres	16 metres	16 metres
Cold Inlet water connection	1½"BSP	1½"BSP	1½"BSP	1½"BSP	1½"BSP	1½"BSP	1½"BSP
Hot outlet water connection	1½"BSP	1½"BSP	1½"BSP	1½"BSP	1½"BSP	1½"BSP	1½"BSP
Drain port connection	¾"BSP	¾"BSP	¾"BSP	¾"BSP	¾"BSP	¾"BSP	¾"BSP
Secondary return connection	¾"BSP	¾"BSP	¾"BSP	¾"BSP	¾"BSP	¾"BSP	¾"BSP
Operating pressure (unvented)	3.5 bar	3.5 bar	3.5 bar	3.5 bar	3.5 bar	3.5 bar	3.5 bar
Max. working water pressure (vented)	10.3 bar	10.3 bar	10.3 bar	10.3 bar	10.3 bar	10.3 bar	10.3 bar
Max. working water pressure (unvented)	5.5 bar	5.5 bar	5.5 bar	5.5 bar	5.5 bar	5.5 bar	5.5 bar
Water test pressure	20.7 bar	20.7 bar	20.7 bar	20.7 bar	20.7 bar	20.7 bar	20.7 bar
Gas connection (gas cock supplied)	¾"BSP	¾"BSP	¾"BSP	¾"BSP	¾"BSP	¾"BSP	¾"BSP
Electrical supply	230V/50Hz	230V/50Hz	230V/50Hz	230V/50Hz	230V/50Hz	230V/50Hz	230V/50Hz
Power consumption	120W	120W	210W	120W	210W	210W	210W
Fuse	5amp	5amp	5amp	5amp	5amp	5amp	5amp
Weight empty	225kg	225kg	225kg	385kg	385kg	385kg	385kg
Weight full	450kg	450kg	450kg	760kg	760kg	760kg	760kg
Shipping weight	259kg	259kg	259kg	408kg	408kg	408kg	408kg
Shipping dimension – depth	889mm	889mm	889mm	889mm	889mm	889mm	889mm
Shipping dimension – width	819mm	819mm	819mm	819mm	819mm	819mm	819mm
Shipping dimension – height	1664mm	1664mm	1664mm	2197mm	2197mm	2197mm	2197mm

(a) Noise level measure at 2m from flue terminal.
(b) Reduce flue length by 1.2m for 90° bend, 0.7m for 45° and 1.5m for condense trap.

2.2 Dimensions and clearances

2.2.1 ECOflo models EC230/600, EC230/700 & EC230/960

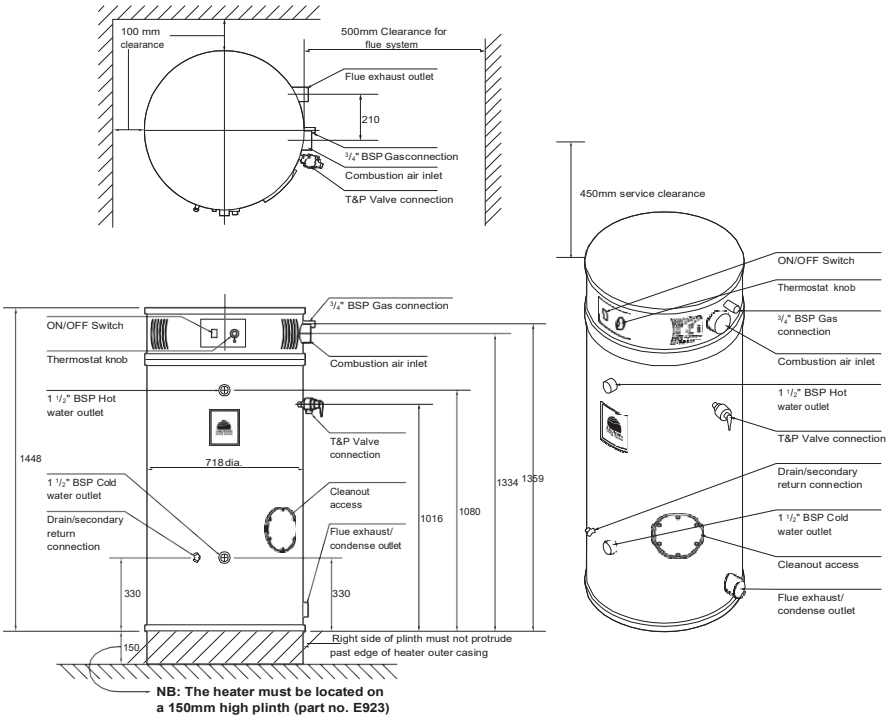

Fig. 1

2.2.2 ECOflo models EC380/740, EC380/980, EC380/1220 & EC380/1400

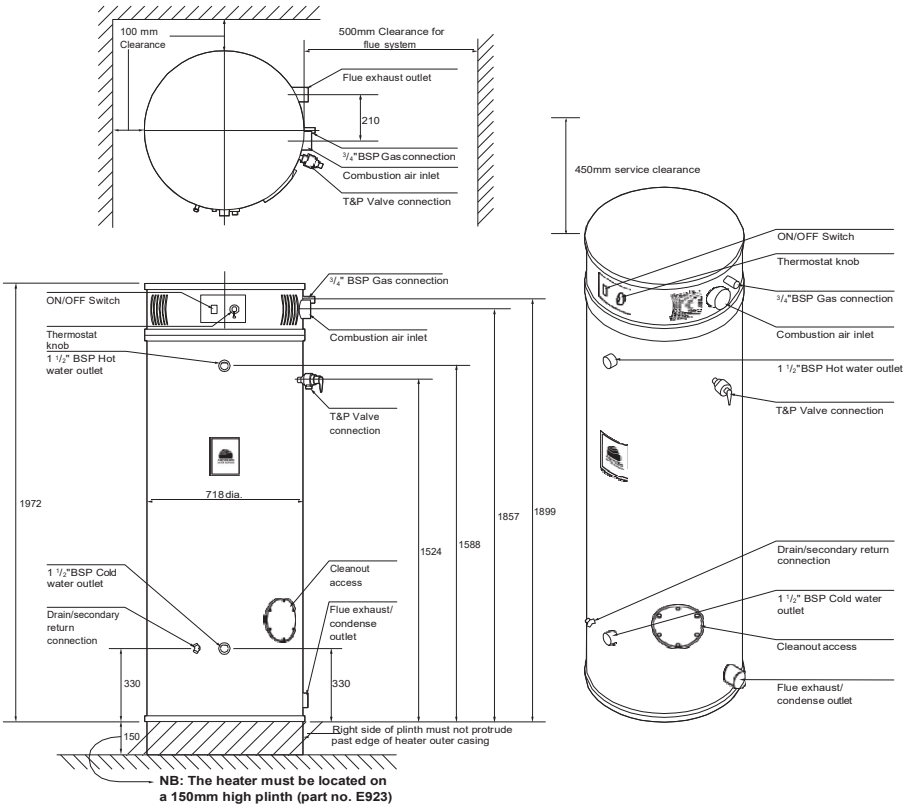

Fig. 2

2.3 ErP data

ECOflo Natural Gas		230/600	230/700	230/960	380/740	380/980
Declared load profile		XL	XL	XL	XXL	XXL
Water heating energy efficiency class		A	A	A	A	A
Water heating energy efficiency	%	92	89	88	95	95
Annual energy consumption	kwh(1)	80	65	75	113	69
Annual energy consumption	Gj(2)	16	17	18	19	19
Other load profiles for which the water heater is suitable to use and the corresponding water heating energy efficiency and annual electricity consumption(3)		-	-	-	-	-
Thermostat temperature setting	°C	60	60	60	60	60
Sound power level L_{WA} indoors	dB	52	56	55	53	62
Ability to off-peak hours functioning(3)		-	-	-	-	-
Enables smart control settings(4)		-	-	-	-	-

(1) Electricity
(2) Fuel
(3) If applicable.
(4) If smart control settings value is "1", the water heating energy efficiency and annual electricity and fuel consumption only relate to enabled smart control settings.

ECOflo Natural Gas			230/600	230/700	230/960	380/740	380/980	380/1220	380/1400
Daily electricity consumption	Q_{elec}	kWh	0.360	0.350	0.360	0.520	0.320	0.350	0.490
Declared load profile			XL	XL	XL	XXL	XXL	XXL	XXL
Sound power level, indoors	L_{WA}	dB	52	56	55	53	62	60	57
Daily fuel consumption	Q_{fuel}	kWh	20.100	21.900	23.500	24.300	24.300	25.000	25.500
Emissions of nitrogen oxides	NO_x	mg/kWh	45	40	40	55	40	40	55
Weekly fuel consumption with smart controls	$Q_{fuel, week, smart}$	kWh	-	-	-	-	-	-	-
Weekly electricity consumption with smart controls	$Q_{elec, week, smart}$	kWh	-	-	-	-	-	-	-
Weekly fuel consumption without smart controls	$Q_{fuel, week}$	kWh	-	-	-	-	-	-	-
Weekly electricity consumption without smart controls	$Q_{elec, week}$	kWh	-	-	-	-	-	-	-
Storage volume	V	l	230	230	230	380	380	380	380
Mixed water at 40 °C	V40	l	∞	∞	∞	∞	∞	∞	∞
Harmonised standards applied	EN: 1320 3-2								
Specific precautions that shall be taken when the water heater is assembled, installed or maintained:	Before any assembly, installation or maintenance the installation and operation manual has to be read attentively and to be followed								

3 Installation

3.1 Introduction

THE LAW REQUIRES THAT INSTALLATION IS CARRIED OUT BY A PROPERLY QUALIFIED PERSON

Installations must be carried out in accordance with Gas Safety (Installation and Use) Regulations 1998, Building Regulations, The Water Supply (Water Fittings) Regulations 1999 and any requirements of the local Gas Supplier, Local Authority, Water and Fire Authorities and the current British Standards and Codes of Practice listed in Section 1.

3.2 Location

The location selected for installation of the water heater must allow the provision of a satisfactory flue, adequate air supply, drain facilities and must be well illuminated.

A purpose built boiler room or compartment is strongly recommended.

A manual valve for isolation of the plant room should be installed in the gas supply; it should be clearly identified and readily accessible for use at all times.

If a purpose built plant room is not available, measures should be taken to protect the water heater from damage and prevent any extraneous matter from being stored on or around the water heater. See BS 6644 Clauses 4, 5 and 6 for details.
The water heater must not be installed in any location which contains a bed, bath or shower. There must be easy access to the plant room and water heater at all times.

The water heater must be located in an area where leakage from the tank, water connections or the combination temperature and safety valve will not result in damage to the area adjacent to the water heater. When such locations cannot be avoided, a suitable drain tray must be installed under the water heater. The drain tray must be no deeper than 38mm (1.5in) and have a minimum length and width of 100mm (4in) wider than the heater. The drain tray must be piped to an adequate drain using 20mm (0.75in) diameter pipe, angled for proper drainage.

Access must be provided around the water heater to provide adequate clearance for its servicing and operation.

The floor and plinth on which the heater is installed must be flat, level and of sufficient strength to withstand the weight of the heater when filled with water and should satisfy the requirements of the Local Authority & Building Regulations.

Any combustible material adjacent to the heater must be placed and shielded as to ensure that its temperature does not exceed 66°C (150°F).

All service clearances for the water heater must be maintained as specified in this Installation Manual.

3.3 Features

ECOflo is the latest addition to the Andrews range of condensing storage water heaters and is designed for large domestic, commercial and industrial applications.

The high efficiency units incorporate Vitraglas® silica glass lined tanks to provide protection against the corrosive effect of hot water and therefore a longer working life.

The condensing glass-lined ultra high thermal efficiency storage water heater features a low NOx pre-mix power burner that is quiet in operation, a 98% gross efficiency that keeps running costs to a minimum and flueing arrangements that offer unsurpassed installation flexibility.

ECOflo – A new standard in condensing storage water heating

The ECOflo range comprises eight models in two storage capacities – 230/380 litres – with heat outputs ranging from 35kW to 79kW and recovery rates of up to 1400 litres/hour through a temperature rise of 50°C. A thermal efficiency rate of up to 98% gross puts ECOflo at the top of the class and leads to greater economy. In addition to outstanding performance characteristics, all ECOflo models can be flued either vertically or horizontally as room sealed balanced flue appliances, using concentric flue components supplied by Andrews, offering the ultimate in siting and installation flexibility. All models incorporate Correx Powered (maintenance free) Anodes as standard which substantially reduce service time and costs. The factory fitted Hydrojet® sediment reduction system on the cold inlet connection helps to prevent sediment build-up at the base of the tank, giving a longer and more efficient working life.

This water heater contains the following features:

3.3.1 Main Power ON/OFF Switch

The front panel of this water heater has an OFF switch, which is lit when the main power is turned on to indicate power to the water heater.

3.3.2 Combustion System

The ECOflo is equipped with a self-compensating, negative pressure pre-mix combustion system. As the blower operates, air is drawn in through the air intake and into a venturi, which pulls gas from the gas valve. The gas and air is then mixed in the combustion blower and sent through the transition tube into the burner. The System then ignites the gas/air fuel mixture to produce the flue products (combustion). The flame sensor signals the ignition module, (described below) that a flame is present.

3.3.3 Ignition Module

The ignition module provides the timing for the combustion system. A sequence of operation (SOP) is described in “Section 5 – Operating Instructions.” As the combustion system progresses through the SOP, LED’s illuminate, allowing accurate trouble-shooting should the need arise. If a failure occurs, the system will “blink” the LED that corresponds to the failure as described in the “Section 6 – Troubleshooting Guide.”

3.3.4 Adjustable Thermostat

The ECOflo is equipped with an adjustable thermostat to control water temperature. Hot water temperatures required for kitchen sinks, sluices, cleaners’ sinks and wash down applications can cause scald burns resulting in serious personal injury and/or death.

The temperature may be adjusted from approximately 27°C to 82°C. It is recommended that lower temperatures be used to avoid the risk of scalding. (Refer to the “Warnings” and the section on SCALDING in “Section 3 – Water Connections.”) It is further recommended, in all cases, that the water temperature be set for the lowest temperature, which satisfies hot water needs. This will also provide the most energy efficient operation of the water heater and minimises scale formation.

The top immersion well of the single bulb controller also contains the high limit (energy cut-off) sensor. The high limit switch interrupts the main burner gas flow should the water temperature reach approximately 93°C.

Should the high limit switch activate, it must be manually reset. This can be accomplished by depressing the red button on the control panel once the water temperature of the tank has dropped below 71°C.

Please contract Andrews Water Heaters (details listed on the Data Plate) if continued high limit switch operations occur.

3.3.5 Condensate Drain

The ECOflo is a condensing type unit and requires a drain to be located in close proximity to allow the condensate to drain safely. The condensate drains from the unit at the base of the exhaust tee piece located near the bottom of the unit. The exhaust tee is provided with a 32mm dia connection. A condense siphon is supplied in the flue kit which should be connected to the 32mm connection at the base of the exhaust tee. The siphon outlet must be connected to a 40mm dia OD plastic waste system. If the condense is allowed to build-up then the exhaust outlet will become blocked and cause improper operation of the water heater. The water heater will need to be raised off the floor, on a concrete slab or base, to utilise a low profile condensate pump to allow free drainage of condensate from the outlet fitting. The condensate plastic drain pipe installation should slope to a suitable drain.

3.3.6 Cleanout

All models are equipped with a cleanout opening to aid the removal of hard water deposits from the tank bottom. If this water heater operates under hard water conditions, the following should be performed at least every 3 months: Turn off water supply and drain the water heater. Remove the cleanout jacket cover and tank cover. When cleaning the tank, care must be taken to avoid trying to break deposits loose as this could damage the glass lining and shorten the life of the water heater. After cleaning, re-install the cleanout tank cover and jacket cover, and refill with water. Refer to the section, “Section 6 – Maintenance” in this Installation and Operating Instruction manual for the procedures for filling and draining the water heater.

3.3.7 Electrically Powered Anodes

All models are supplied complete with Andrews’ Correx Powered Anode system. The anodes are non-sacrificial and therefore do not require any maintenance or replacement. For this reason, the service clearance required above the water heater can be reduced quite significantly. Correx anodes require a permanent power supply, this is all pre-wired and the anode system can be located at the top of the heater, beneath the top cover.

3.3.8 Service Panel

The service panel is located behind the service panel access cover, which is located by the exhaust outlet tee piece near the bottom of the water heater. This panel contains a pressure switch to monitor for excess pressure in the exhaust pipe from a blocked vent condition. A collector high limit switch is used to monitor the ambient temperature between the first pass collector and the exhaust collector. This is a manually re-settable switch. If this switch continues to trip, please contact Andrews Water Heaters.

3.3.9 Access Lid

Access for servicing the water heater from the top is easy. Remove the two latches and the metal screw at the front centre of the top to remove the lid for accessing the heater controls. The lid must be replaced and re-latched upon completion of servicing.

3.4 Technical detail

Thermal Efficiency up to 98.0% – Fully condensing design.

Three Pass Flue System – The three pass flue system keeps the hot combustion gases moving at a high velocity. The combination of high turbulence and velocity causes an enormous rate of heat transfer into the water.

Low NOx Premix Power Burner – Developed for the ECOflo Range, a turbulent flame shoots down the submerged combustion chamber. This turbulence causes a thorough mixing of the gas and air for optimum combustion and high heat transfer efficiencies.

Submerged Combustion Chamber – Submerging the combustion chamber in the centre of the water storage tank minimizes radiant heat loss and improves efficiency.

Non-CFC foam insulation – Surrounds the tank surface, saving energy by reducing heat loss.

Electronic Controls – Adjustable electronic thermostat 27°-82°C recycling Energy Cut Off (E.C.O.) shuts off all gas in event of an overheat condition.

Zero Inch Clearance – The ECOflo external jacket is cool to the touch and is approved for zero inches to combustibles for unsurpassed installation flexibility.

Vitraglas® lined tank – Andrews Water Heater tanks are protected from the corrosive effects of hot water by an exclusive ceramic porcelain-like coating. Our high silica Vitraglas® lining provides a tough interior surface.

Electrically powered anodes – Each ECOflo product is supplied with a factory fitted Andrews Correx Powered Anode system. This significantly reduces service time due to the anodes being maintenance free.

Factory installed Hydrojet® Sediment Reduction System – Cold inlet sediment reduction device made of stainless steel for increased durability. Helps prevent sediment build up in tank.

Factory installed dielectric fittings – All heaters are equipped with special water heater nipples for longer heater life. No special dielectric fittings to buy.

Flexible fluing – The ECOflo range can be flued vertically or horizontally with the Andrews 100/150mm concentric flue pipe system.

The maximum flue run length is sixteen metres from the appliance connector to the terminal
The overall length is reduced if an elbow or condensate trap is fitted (see below).

3.4.1 Determining required flue length

1. Determine the total length of straight concentric flue pipe (in metres) required for the installation.
2. Add 1.2 metres of flue for every 90°C elbow.
3. Add 0.7 metres of flue for every 45°C elbow.
4. Add 1.5 metres for condensate trap.
5. Total flue length cannot exceed “Maximum Length” in the above paragraph.

Note
Do not include the flue terminals in determining maximum flue installation length.

Three year limited warranty on storage tank
– Heavy gauge steel automatically formed, rolled and welded to assure a continuous seam for glass lining.

One year limited warranty on parts

3.5 Heat exchanger

Burner fires down into 8” diameter flue tube transferring the radiant heat from the burner flame into the tank water.

1st Pass Flue Collector: At the bottom of the tank, a refractory lined heavy gauge flue collector re-directs the flue gases from the 8” flue tube to pass through two 4” diameter flue tubes to the top of the tank.

4” diameter flue tubes have stainless steel baffles to turbulate the flue gases to improve heat transfer.

2nd Pass Flue Collector: At the top of the tank, the flue gases from the 4” flue tubes collect in a heavy gauge steel collector to redirect the flue gases down eight 2” diameter flue tubes.

2” diameter flue tubes are glass lined on the inside as well as outside to prevent corrosion from flue gas condensate. Stainless steel flue baffles inside the 2” flue tubes turbulate the flue gases to aid heat transfer. Flue temperatures are reduced from 260-340°C from the second pass collector to 54°C or less in the flue exhaust.
3rd Pass Collector: The flue gases from the bottom of the 2” flue tubes are collected at the bottom of the tank in a stainless steel flue collector, where the exhaust gases and condensate exit out through a short Stainless Steel pipe extending outside the jacket that connects to the coaxial concentric flue system.

3.6 Flue system

A condensate tee with a silicone seal is connected to the plastic exhaust pipe and interfaces with the flue system. The tee connection has a 32mm condensate drainpipe connection to allow the siphon to be fitted. The waste pipe will then be taken from the siphon outlet to drain.

A section of aluminium flue pipe will run to the top of the water heater to connect to the air intake tee.

The intake tee adapts to the concentric flue pipe and has an elbow to connect to the combustion air intake pipe.

The 100/150 mm dia. Andrews' concentric flue pipe will then run to the horizontal or vertical flue terminal.

Maximum concentric flue for this product is 16 metres. Each additional 90° elbow is equivalent to a reduction of 1.2 metres of straight flue pipe.

Each additional 45° elbow is equivalent to a reduction of 0.7 metres of straight flue pipe. If a condensate trap is installed, this is equivalent to a reduction of 1.5 metres of straight flue pipe.

3.7 Water connections

Front hot and cold 1½" BSP (male) water supply connections.

3.8 Gas connections

¾" Gas Inlet Nipple for BSP connection to gas supply.

3.9 Unpacking

INSPECT SHIPMENT CAREFULLY FOR ANY SIGNS OF DAMAGE

1. All equipment is carefully manufactured, inspected and packed.
2. Any claims for damage or shortage in shipment must be filed immediately with Andrews Water Heaters as detailed on the warranty card.

3.10 Location

Locate water heater in front of final position before removing crate.

1. LOCATE so the flue installation connections will be as short and direct as possible.
2. THIS WATER HEATER IS NOT SUITABLE FOR INSTALLATION ON A COMBUSTIBLE FLOOR. Do not install this water heater on carpeting.
3. FOR EVERY INSTALLATION, provide a solid level elevated base such as concrete or other suitable pad to raise the water heater at least 150mm to provide a slope for the condensate waste to run to a suitable drain.
4. Minimum clearance to combustible material is 0" for the Top, Sides and Rear of this water heater. However, it is recommended that at least 450mm from the Top, 600mm from the Front, 100mm from the Left Side and Rear, and 500mm from the Right Side edge of the water heater be provided for servicing and ease of installation.

See
Section 2, page 9 for diagram. Clearance for servicing may be reduced down to minimum clearance to combustible material, but service time and effort may be greatly increased.

3.11 Remove crate

1. Remove all banding and pry off crate sides carefully so as not to damage the water heater.
2. Carefully roll/lift the water heater from the crate base.

Caution
Do not drop water heater. Do not bump water heater jacket against floor.

Do not bump exhaust flue pipe against crate or other objects. This will damage the heater and cause it to be inoperable or create nuisance problems.

MOVE WATER HEATER TO PERMANENT POSITION
by sliding or walking. Place on plinth/base as detailed previously.

3.12 Location

KEEP APPLIANCE AREA CLEAR AND FREE OF COMBUSTIBLE MATERIALS, PETROL AND OTHER FLAMMABLE VAPOURS AND LIQUIDS.

This water heater MUST be installed indoors.
This water heater MUST be located in an area where the general public does not have access.

3.13 Chemical vapour corrosion

Corrosion of the internal flue ways and concentric flue system will occur if air for combustion contains certain chemical vapours. Such corrosion may result in poor combustion and create a risk of asphyxiation, as well as reducing the life of the water heater. Spray can propellants, cleaning solvents, refrigerator and air conditioning refrigerants, swimming pool chemicals, calcium and sodium chloride, waxes and process chemicals are corrosive. Products of this sort should not be stored near the water heater or outside by the air intake (if applicable).

3.14 Scalding

This water heater can deliver scalding temperature water at any outlet in the system. Be careful whenever using hot water to avoid scalding injury. To protect against injury, you should install approved mixing valves in the water system. This valve will reduce point of discharge temperature by mixing cold and hot water in branch supply lines. Such valves are available from your local plumbing supplier.

3.15 Approximate time/temperature scald chart

The following chart details the relationship of water temperature and time with regard to scald injury. This may be used as a guide in determining the safest water temperature for the installation.

Caution

APPROXIMATE TIME/TEMPERATURE RELATIONSHIPS IN SCALDS
48.8°C More than 5 minutes
51.6°C 1½ to 2 minutes
54.4°C About 30 seconds
57.2°C About 10 seconds
60.0°C Less than 5 seconds
62.8°C Less than 3 seconds
65.6°C About 1½ seconds
68.4°C About 1 second

The water heater and individual shutoff valve must be disconnected from the gas supply piping system during any pressure testing of the system at test pressures in excess of 35mbar/14.0 in wg. The water heater must be isolated from the gas supply piping system by closing its manual shut off valve during any pressure testing of the gas supply system at test pressures equal or less than 35mbar/14.0 in wg. The supply line must be capped when not connected to the water heater.

3.16 Gas meter size natural gas only

Be sure that the gas meter has sufficient capacity to supply the full rate gas input of the water heater as well as the requirements of all other gas fired equipment supplied by the meter. If the gas meter is too small, ask the gas company to install a larger meter having adequate capacity.

3.17 Gas pressure regulation

Main line gas pressure to the water heater should be maximum 35mbar/14.0 in wg. The inlet gas pressure must not exceed the maximum value. In some installations, a regulator sized for the input rating of the water heater will need to be installed just ahead of the inlet gas connection to the water heater to reduce excess gas pressure or surges in gas pressure.

3.18 Gas supply - Natural gas

The installation of the gas supply must conform, depending on its size, to the requirements of British Standards and Codes of Practice listed in Section 1 of this manual.

A gas meter will be connected to the service pipe by British Gas plc or its authorised contractor.

The meter and service pipe should be checked by British Gas, or its authorised contractor, to ensure that they are adequate to deal with the gas supply to the water heater(s) in addition to any existing or additional requirements.

Fit the service gas cock (supplied) to the gas connection on top of the water heater using a suitable jointing compound and connect to the gas supply.

The water heater is not intended for operation at higher than 35mbar (14.0 in wg) supply gas pressure. Higher gas supply pressures require supplemental reducing service regulator. Exposure to higher gas supply pressure may cause damage to the gas controls, which could result in fire or explosion. If overpressure has occurred, such as improper testing of gas lines or emergency malfunction of the supply system, the gas valve must be checked for safe operation.

Where the water heater(s) is (are) installed in a water heater house or purpose built compartment, a manually operated valve for the water heater house must be fitted in accordance with the Gas Safety (Installation and Use) Regulations 1998. The valve must be easily identified and readily accessible.

After installation, the system should be pressure tested for soundness and purged in accordance with BS 6891 or IM/2 and IM/5 as appropriate.

3.19 Electrical supply

External wiring to the water heater(s) must be installed in accordance with current I.E.E. Regulations for the wiring of buildings and to any Local Regulations that may apply.

The ECOflo range is designed to operate from a 230V, single phase supply. The fuse rating is 5 amps.

The method of connection to the mains electrical supply should facilitate complete electrical isolation of the appliance, preferably by use of a fused double pole switch or fused spur box serving only the heater. The disconnection of the supply shall have a contact separation of 3mm on all poles. The double pole switch for the water heater electrical supply must be located where it can be easily reached under all circumstances.

The point of connection to the mains electrical supply should be readily accessible through a cable entry gland at the rear of the appliance on the combustion assembly surround.

Connect the electrical supply to the main control panel terminal block via the cable gland. Mains input cable should be 0.75mm² 3 core and should be connected to the mains supply as detailed above.

Mains Voltage: 230V – IP 20
Frequency: 50Hz
Fuse: 5 Amps3

3.19.1 Wiring diagram - Model

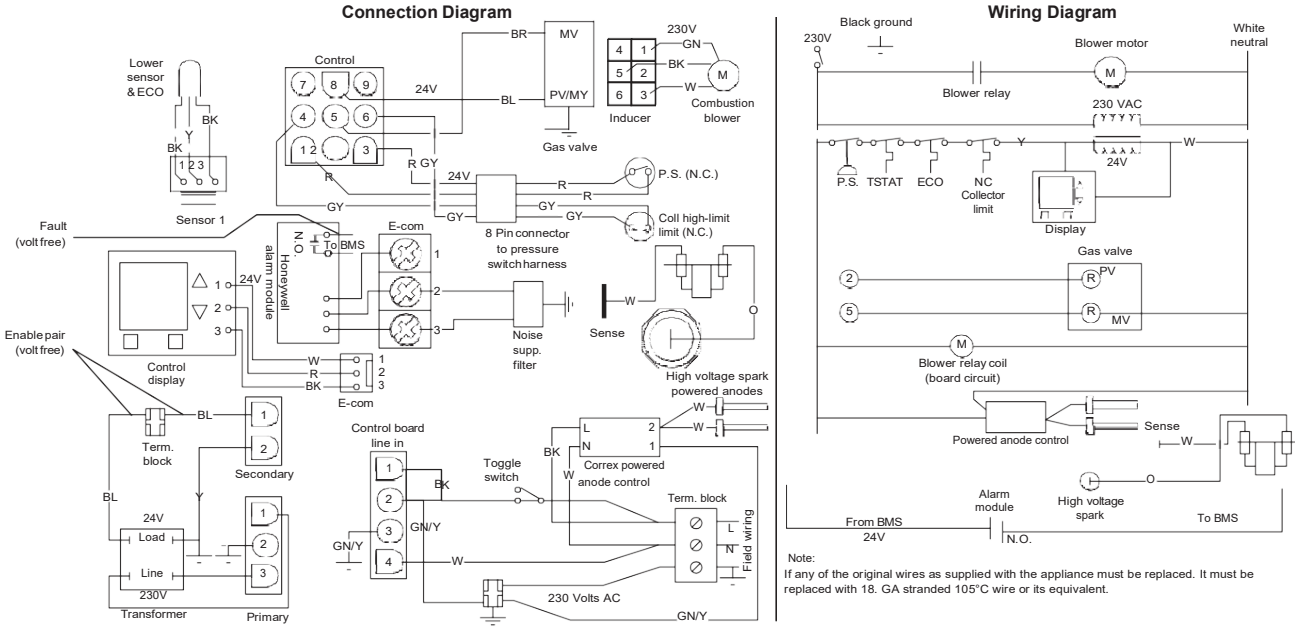

Note:
If any of the original wires as supplied with the appliance must be replaced. It must be replaced with 18. GA stranded 105°C wire or its equivalent.

Fig. 3

3.20 Flue systems

Andrews Water Heaters' ECOflo is a Balanced Flue, Gas Water Heater where all air for combustion is obtained from the outside atmosphere and all flue gases are discharged to the outside atmosphere. The flue system is a single concentric (pipe within pipe) design where the flue products are discharged through the inside flue tube and the combustion air supply surrounds the flue surrounded by the outside pipe. The flue system incorporates both combustion air supply and the flue exhaust. The flue system component which is outside the building, takes in the combustion air supply and discharges the flue products (whilst keeping them separate) is referred to as the 'direct flue terminal'.

Warning
The direct flue systems MUST be properly installed. Failure to do so could results in property damage or personal injury. DO NOT install any damaged components. Contact Andrews Water Heaters for replacement parts. The flow of combustion air must not be restricted. Keep direct flue terminal openings clear of any objects likely to cause flow restriction.

3.20.1 Direct flue terminal

Shall terminate at least 1.5m (5ft) above any forced air inlet located on the same wall. This provision does not apply to the combustion air intake of a direct flue appliance or the circulating air inlet and flue gas discharge of listed outdoor appliances.

Shall be installed with at least a 300mm (12in) flue termination clearance from any air opening into a building.

The bottom of the direct flue terminal shall be located at least 300mm (12in) above ground.

Consideration should be given to the location of the flue terminal. The flue terminal should be located where the discharge of flue products does not cause a nuisance. Consideration should also be given with regard to noise that may be emitted by this flue system. In all cases the flue termination must meet the requirements of BS6644.

A suitable terminal guard must be fitted if less than 2 metres above ground level.

3.21 Optional conventional flue (open flue)

This is an open flued arrangement where the air is drawn into the appliance from within the plant room (boiler house). Permanent ventilation is required to allow correct operation of the appliance (refer to BS 6644). Alternatively, the ventilation can be supplied by running fresh air ducting (150mm) direct from outside, terminating with a suitable terminal.

The maximum 'combined' flue run is 32 metres. The use of 90° and 45° bends will reduce the allowed overall length by 1.2m per 90° and 0.7m per 45° bend used along the flue run.

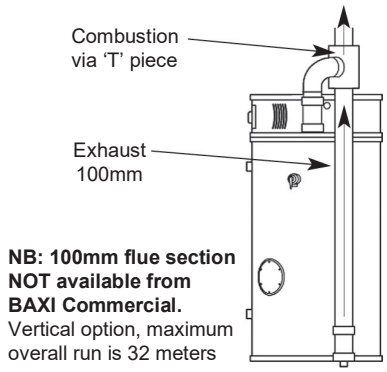

Fig. 4

Note
The overall length does not include the 1m terminal. The 1m terminal is not to be included in determining the overall length of the flue.

3.21.1 Maximum Flue Distances (Horizontal or Vertical)

Number of 90° Elbows	Maximum length of straight pipe (excluding flue terminal) to exterior wall
0	16m (52ft 6in)
1	14.8m (48ft 6in)
2	13.6m (44ft 7in)
3	12.4m (40ft 7in)

Note
Each 45° elbow reduces the maximum flue distance by 700mm (2ft 3in).
IMPORTANT: Do not exceed the flue distances or the number of elbows listed above. This may cause heater malfunction or unsafe conditions.

3.22 Horizontal and vertical flue kits

3.22.1 Installation procedure

1. The Horizontal or Vertical flue kit includes the components as listed below. The concentric flue pipe system includes both the flue exhaust (inside pipe) and combustion air (outside pipe). The flue pipe may be cut on the unflared end (end without gasket) as required for installation.

2. Determine if additional flue components are required for installation. Refer to the flue component information on pages 51 for available optional flue components.

3. Ensure that the flue terminal location complies with requirements described within this manual and the Local Codes of Practice.

4. Measure the vertical and horizontal distance from the water heater flue connection to determine the number of components required.

3.22.2 Horizontal flue kit/fittings pack – 230 litre models AWH part no: B342 supplied components

Part Description	Part Number
Exhaust Outlet Tee c/w Condense Outlet (82500)	E860
100mm to Concentric Exhaust Connector (75412)	E861
Air intake Tee Piece Connector (82501)	E862
Condense Syphon (87436)	E863
Horizontal Flue Terminal, 100/150mm (87990)	E236
90° Elbow c/w clamp, 100/150 (87890)	E205

3.22.3 Vertical flue kit/fittings pack – 230 litre models AWH part no: B344 supplied components

Part Description	Part Number
Exhaust Outlet Tee c/w Condense Outlet (82500)	E860
100mm to Concentric Exhaust Pipe (75412)	E861
Air intake Tee Piece Connector (82501)	E862
Condense Syphon (87436)	E863
Vertical Flue Terminal, 100/150mm (87969)	E866

3.22.4 Horizontal flue kit/fittings pack – 380 litre models AWH part no: B343 supplied components

Part Description	Part Number
Exhaust Outlet Tee c/w Condense Outlet (82500)	E860
100mm to Concentric Exhaust Pipe (75413)	E865
Air intake Tee Piece Connector (82501)	E862
Condense Syphon (87436)	E863
Horizontal Flue Terminal, 100/150mm (87990)	E236
90° Elbow c/w clamp, 100/150 (87890)	E205

3.22.5 Vertical flue kit – 380 litre models AWH part no: B345 supplied components

Part Description	Part Number
Exhaust Outlet Tee c/w Condense Outlet (82500)	E860
100mm to Concentric Exhaust Pipe (75413)	E865
Air intake Tee Piece Connector (82501)	E862
Condense Syphon (87436)	E863
Vertical Flue Terminal, 100/150mm (87969)	E866

3.23 Flue systems

3.23.1 Optional Components for 100/150 mm dia (concentric) Flue

Quantity	Flue Length	Part Description	Part Number
1	1000mm (40in)	Cuttable flue pipe with clamp	5136159
1	500mm (20in)	Flue pipe with clamp	5136160
1		90° Elbow	5136162
1		45° Elbow	5136161
1		Flat roof flashing for vertical flue terminal with adjustable cap	E207
1		Roof flashing for pitched roof to suit 150mm (6in) dia flue size	E208
1		Locking clamp 150mm (6in) dia.	5136165
1		Condense Syphon	E863
1		Condensate trap pipe kit to syphon	5136164
1		Wall Bracket	5136163
1		80mm Seal	5136166

Model	EC230/600	EC230/700	EC230/960	EC380/740	EC380/980	EC380/1220	EC380/1400
Flue size (concentric) mm	100/150	100/150	100/150	100/150	100/150	100/150	100/150
Max flue run – room sealed (a) m	16	16	16	16	16	16	16

Reduce flue length by 1.2m for 90° bend, 0.7m for 45° bend and 1.5m for a condensate trap.

The ventilation requirements for room sealed flue systems are given on pages 33 and 34.

3.23.2 ECOflo 380/1900 Horizontal fittings pack – Part No: B343

Part No.	Description	Qty
E910	Concentric measure point	1
E860	Exhaust outlet Tee	1
E865	100mm concentric exhaust pipe	1
E862	Air intake “T” piece	1
E863	Condense syphon	1
E236	Horizontal terminal 100/150 mm	1
E205	90º elbow/clamp	1

3.23.3 ECOflo 380/1900 Vertical fittings pack – Part No: B345

Part No.	Description	Qty
E910	Concentric measure point	1
E860	Exhaust outlet Tee	1
E865	100mm concentric exhaust pipe	1
E862	Air intake “T” piece	1
E863	Condense syphon	1
E866	Vertical terminal 100/150mm	1

3.23.4 General

Flue terminals must be installed in accordance with the Clean Air Act to ensure the results of combustion are properly dispersed. The drawing on page 25 shows some minimum clearances for the flue terminal. In addition, the flue terminal
should be positioned where it will not cause a nuisance from noise or from the combustion waste accumulating. Please contact Andrews Technical Support Department if advice is needed for a particular installation.

If installed on a roof valley, the terminal should be at least 1m above the highest part of the roof structure and 2.5m from any adjacent structure.

The terminal must be fitted with a guard if less than 2m ground level or in a position where it may cause injury to persons resulting from touching a hot surface. Guards can be ordered with flue components, see table on page 100.

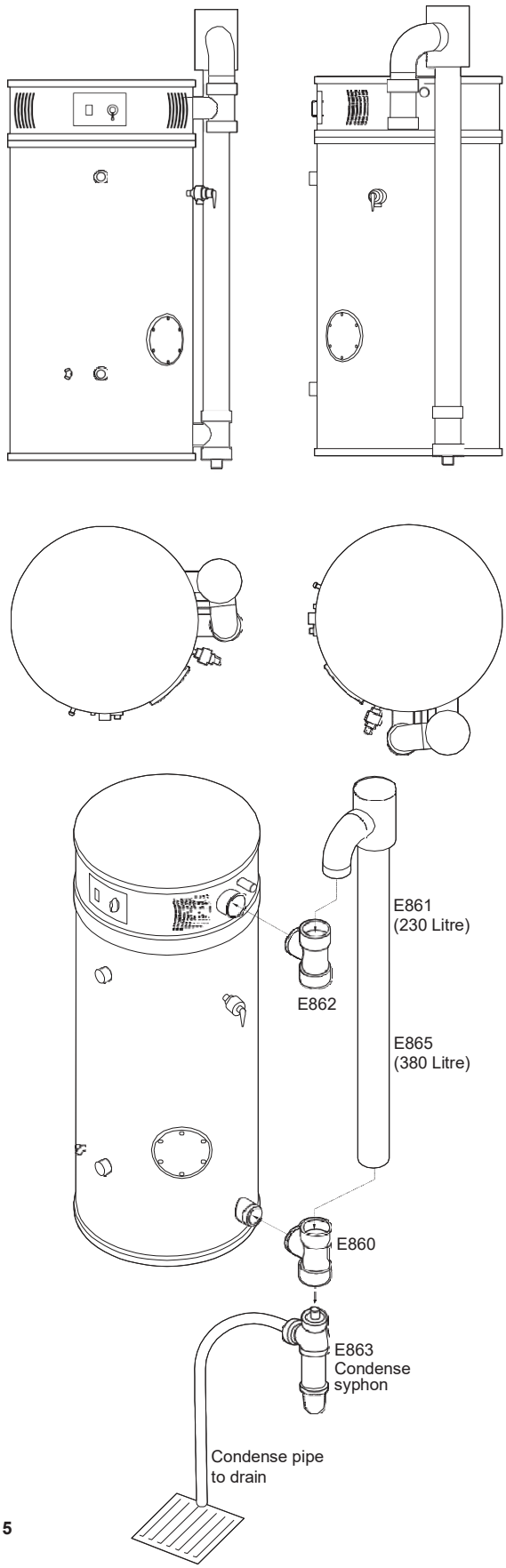

Fig. 5

Warning
The flue system must be properly installed. Ensure the inner flue is securely sealed at all the joints otherwise incomplete combustion may result.

Do not exceed maximum flue lengths including elbows.

3.23.5 ECOflo 230 & 380 Litre flue systems

The ECOflo uses a concentric flue system,**150mm outside diameter with an inner flue of 100mm diameter**.

Flue components fit together with silicon sealing rings and the flues are retained with sealing clamps. Each heater can be ordered with either a horizontal or vertical flue kit. Flue assembly instructions are also included.

Prior to installing the concentric flue system and terminal, the following must be carried out:

1. Fit item E860 to the stainless steel exhaust outlet connection on the appliance and ensure that the condense connection is at the base of the tee piece.
2. Fit item E862 to the PVC air intake connection on appliance and ensure that the open end is at the top of the tee piece.
3. Fit item E861 or E865 (depending on the model) to both previously fitted E860 and E862. Ensure that both connectors are located correctly. Secure the 100mm dia. vertical section of item E861 or E865 to heater outer casing with brackets supplied. Ensure that internal cable is not damaged during installation.
4. Fit item E863 condense syphon to 32mm connection at base of condense tee (E860).
5. Install 40mm OD plastic waste system from syphon outlet to suitable drain.

A minimum downward slope of between 3mm to 6mm per 300mm length of water pipe must be adhered to.

3.23.6 ECOflo 230 & 380 Vertical/horizontal flue system

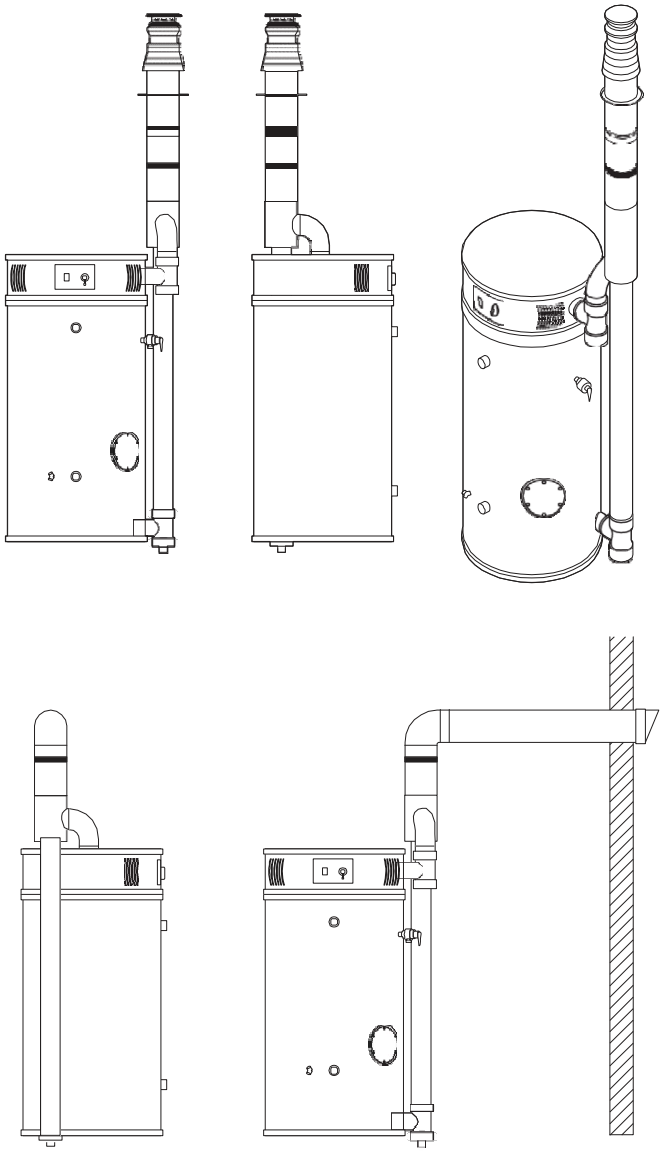

Fig. 6

Height of concentric section above heater	205mm
Height of concentric sample point	115mm (+/– 5mm)
Height of centre line of 90° bend	178mm (+/– 5mm)
Total height to centre line of bend	500mm (+/– 10mm)
Total height to centre line of bend including EC230 heater:	1948mm (+/– 10mm)
Note: Total height to top of bend	573mm (+/– 10mm)
Total height to top of bend including EC230 heater	2021mm (+/– 10mm)
Total height to centre line of bend including EC380 heater	2472mm (+/– 10mm)
Total height to top of bend including EC380 heater 2525mm	(+/– 10mm)

Heights are given from bottom of heater and EXCLUDE a plinth.

3.23.7 Flue systems typical installation

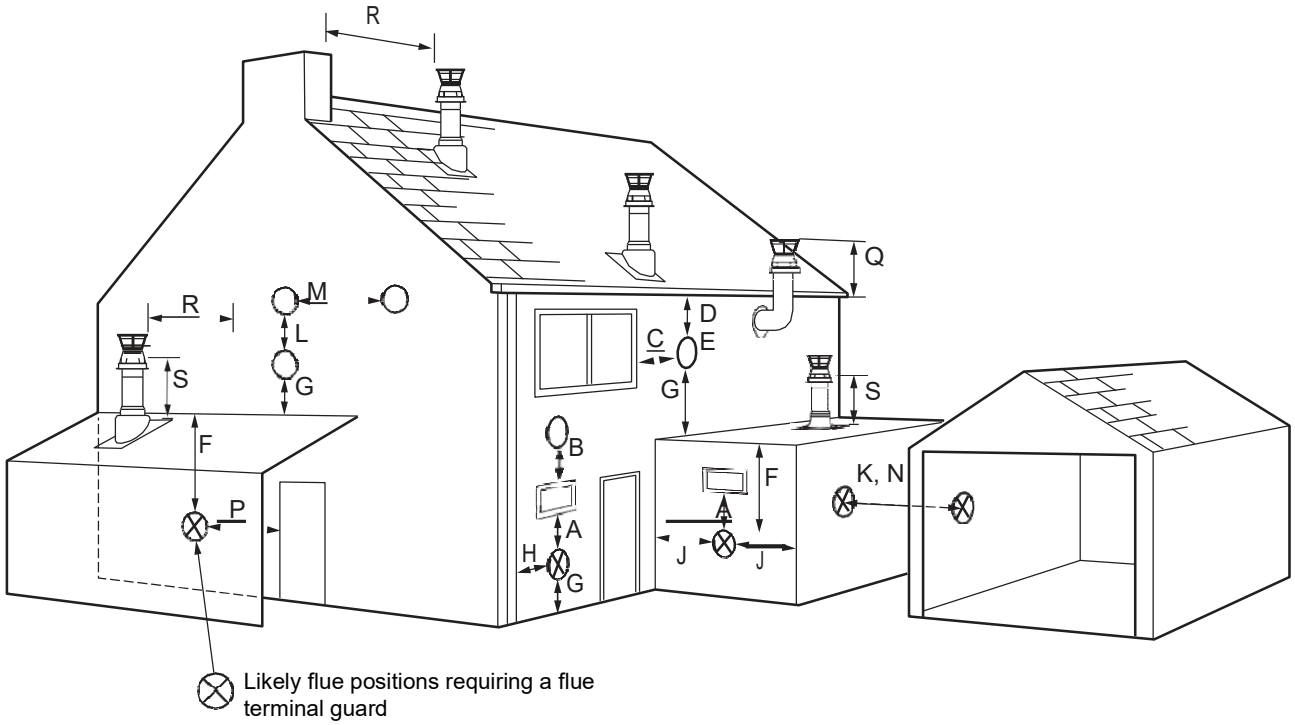

Fig. 7

Terminal Positions with Minimum Distance (mm)	Models 600 to 1200	Models 1400
A Directly below an opening, air brick, opening window etc.	300	2500
B Above an opening, air brick, opening window etc.	300	860
C Horizontal to an opening, air brick, opening window etc.	300	860
D Below a gutter or sanitary pipework	75	200
E Below the eaves	200	200
F Below a balcony or carport roof	200	200
G Above ground, roof or balcony level	300	300
H From vertical drain/soil pipework	150	150
J From an internal or external corner	200	600
K From a surface or boundary facing the terminal	600	3000
L Vertically from a terminal on the same wall	1500	2500
M Horizontally from a terminal on the same wall	300	600
N From a terminal facing the terminal	1200	2700
P From an opening in a carport (e.g. door, windows) into the building	1200	N/A
Q Above roof	500	400*
R From a vertical structure on a roof	500	2500
S Above flat roof	600	400*

*If > 2500mm from an obstruction if < 2500 refer to IGE/UP/10

600 to 1220 refer to BS5440 & 1400 refer to IGE/UP/10

3.23.8 Installing the horizontal flue terminal

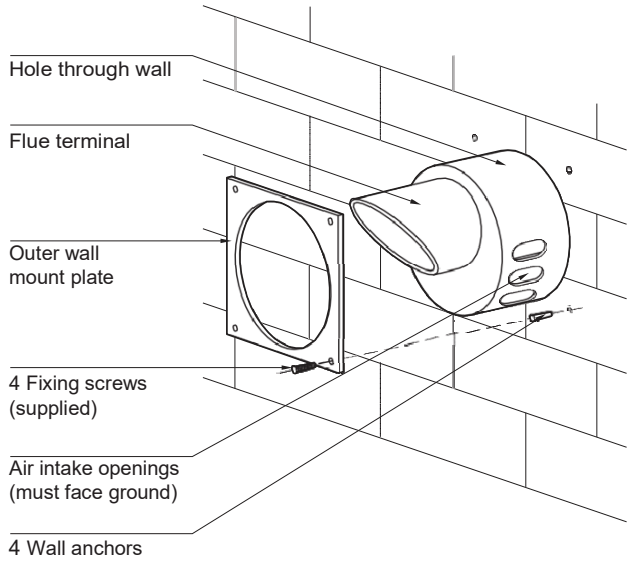

Fig. 8

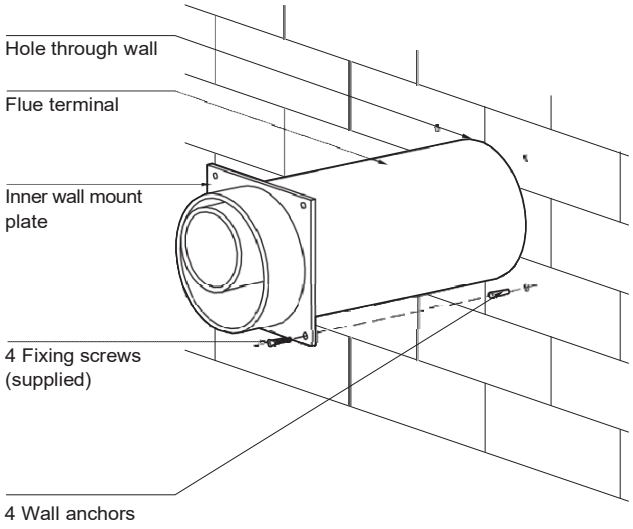

Fig. 9

Note
The horizontal flue terminal supplied may be used through outside walls up to 600mm (24in) thick.

1. Horizontal flue Terminal (Through the Wall) supplied

a) Cut an opening of at least 165mm (6.5in) diameter through to the outside.

b) Slide the flue terminal through the wall opening to the rib closest to the intake air openings of the terminal and even with the outside wall.

c) Slide the outside wall plate over the flue terminal and fasten to the wall with four screws. Depending on the wall construction, wall anchors may be required to reinforce the screws.

d) Install inside wall plate on the inside wall and secure with four screws. Depending on wall construction, wall anchors may be required to reinforce the screws.

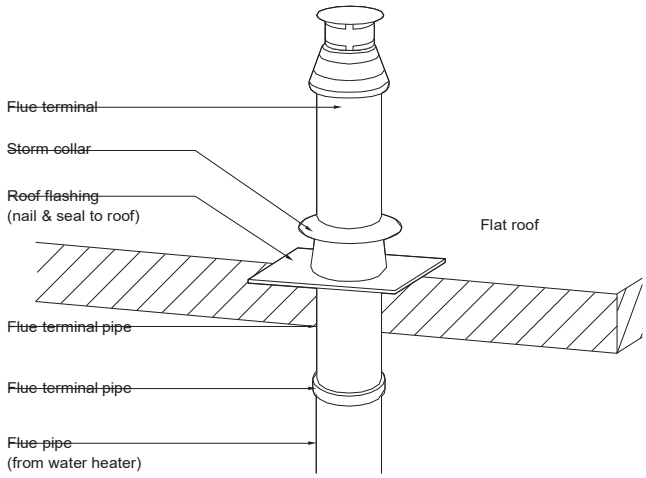

Fig. 10

3.23.9 Installing the vertical flue terminal

2. Vertical Flue Terminal (Through the Roof)

a) Determine the exact location where the roof flue terminal will exit the roof, ensuring the flue system clears all obstructions. For pitched roofs, the flue cap must be the distance above the roof line as specified (300mm to base of Flue Clamp, minimum). The top of the roof terminal may extend up to 760mm (2.5ft) above the roof line as required.

b) Run the concentric flue system to the proper distance below the roof sheathing required for the correct distance of the roof terminal above the roof surface. See the following sections on installing the rest of the flue system.

c) Cut a minimum 165mm (6.5in) diameter hole for the flue centered in the desired location for the roof terminal, see Fig. 10.

d) Centre the roof flashing over the hole using either the flat roof flashing or universal flashing for pitched roofs.

e) Slip the storm collar supplied with the roof flashing kit over the outside of the flue terminal and align with the flue pipe end below roof opening. Insert the terminal into the flue pipe.

f) Fasten the roof flashing with nails. Seal the flue terminal and flashing to the roof.

g) Install the gasketed clamp around the joint between the flue terminal and flue pipe.

3.23.10 Installing flue piping sections for both applications

a) The coaxial flue pipe sections are designed to fit tightly together and seal with the integral flue pipe seal and supplied pipe clamps. No silicone caulk or special tools are required.

b) All flue sections and fittings come complete with silicone flue pipe gaskets and outside gasketed pipe clamps for making air tight connections between the flue pipe connections.

c) Raise the flue pipe to the flue terminal connection with the gasketed end of the flue pipe towards the flue terminal. Insert the flue pipe into the flue terminal connection and grasp the end of the flue pipe while twisting and pushing the pipe until inserted all the way into the flue terminal.

d) Connect the outside pipes together using the gasketed clamps provided. The flue pipes have ribs located near each end. When the flue piping is connected, the gasketed clamps shall cover the ribs and joints of the connecting flue tubes. Support each pipe section with hangers attached to the supporting joints in the wall or ceiling.

e) Continue connecting pipe sections together with clamps and supporting with hangers.

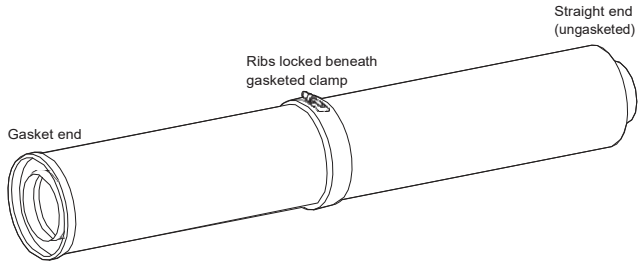

Fig. 11

f) The last pipe section may be cut to fit the distance required to reach the water heater flue connections. If a flue condensate trap is specified, install the supplied tap with crimped end into the gasketed end of the elbow (horizontal flue installations) and clamp the condensate tee and elbow together. Install the crimped end of the elbow into the flue connection of the water heater. On vertical installations, install the crimped end of the condensate trap directly onto the water heater flue connection.

g) Carefully measure the length of straight flue pipe needed, allowing for about 50mm (2in) insertion into the elbow. Mark the un-gasketed end of the pipe to be cut and carefully make a straight cut on the outside pipe to the desired length. Make sure the inside tube is not cut. Cut the inside flue pipe about 50mm (2in) more than the outside pipe so that the flue pipe protrudes slightly beyond the outside pipe. Connect the flue pipe and clamp at each end.

h) Use the clamp supplied in the flue kit with the stepped gasket to seal the elbow or condensate trap to the concentric flue connector.

i) Condensate disposal: Connect syphon (part no. E211) to the 32mm slip joint condensate trap connector and install 40mm OD waste pipe suitable drain, (see Fig.15)**.**

Note

On all flue installations, for distances over 1.5 metres, we recommend that a condensate trap is fitted.

IMPORTANT: In order for the condensate trap to collect and dispose of the condensate from the flue pipe, the flue system must have a downward slope of 21mm per metre (0.25in/ft) towards the condensate trap. The condensate trap must be installed as close as possible to the flue adaptor to prevent condensate from accumulating and draining back into the base of the water heater.

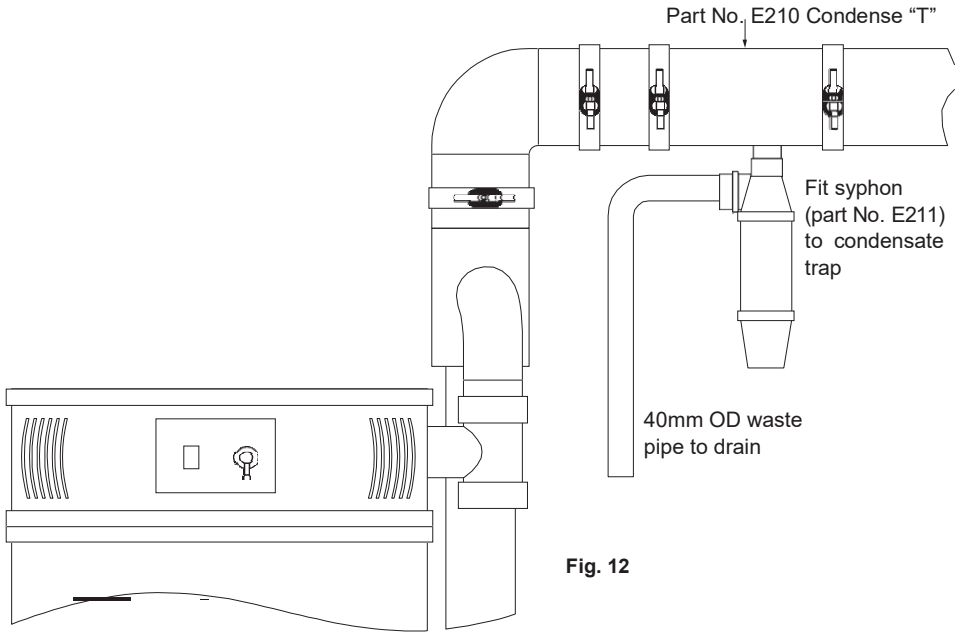

Fig. 12

3.24 Air supply and ventilation

3.24.1 Concentric flue systems

The following notes are intended to give guidance:
Where the heater is to be installed in a room, NO VENTS ARE REQUIRED.

Where the heater is to be installed in a COMPARTMENT, permanent air vents are required in the COMPARTMENT at high and low level. These air vents must either communicate with a room or internal space or be direct to outside air.

The minimum effective areas of the permanent air vents required in the compartment are as follows:

Air vents should have negligible resistance and must not be sited in any position where they are likely to be easily blocked, flooded or in any position adjacent to an extraction system which is carrying flammable vapour.

Consideration must be given to the position of the high level ventilation opening. A high level vent must not be sited within 300mm measured vertically of the flue terminal.

Grilles and louvres should be so designed that high velocity air streams do not occur within the space housing the heater(s).

The grilles should have a total minimum free area for the water heater(s) in addition to any other requirements as follows:

- **Low level (inlet)**
  540cm² plus 5cm² per kilowatt in excess of 54kW total net input.
- **High level (outlet)**
  270cm² plus 2.5cm² per kilowatt in excess of 54kW total net input.

3.24.2 Air vents areas

Note
Both air vents must communicate with the same room or internal space or must both be on the same wall to outside air.

Position of Air Vents	Air from Room for Internal Space	Air Direct from Outside
High Level	10cm² per kW Net input	5cm² per kW Net input
Low Level	10cm² per kW Net input	5cm² per kW Net input
In a Room or Internal Space	No requirement for Ventilation	No requirement for Ventilation

Note
IMPORTANT:

1. The effective area requirements specified in the table are related to the maximum heat input of the heater(s) and are equivalent to those specified in BS6644.
2. The free area of the grilles should not be less than the size of the recommended ventilation opening.
3. The supply of air to a space housing the heater(s) by mechanical means should be:
   (a) Mechanical inlet with natural extraction.
   (b) Mechanical inlet with mechanical extraction.

Note
Natural inlet with mechanical extraction must not be used.

Where a mechanical inlet and mechanical extraction system is used, the design extraction rate must not exceed one third of the design inlet rate.

All mechanical ventilation systems must be fitted with automatic gas shut off safety systems which cut off the supply of gas to the heater(s) in the event of failure of either the inlet or extract fans.

The requirements for air supply by mechanical ventilation are given in BS6644 Clause 19.3. and in IGE/UP/10 Pt.1.

The permanent air vents shall be sited away from the extractor fans. It may be necessary to increase the ventilation area to compensate for the extractor fan.

3.25 Water quality and treatment

Where extreme conditions of water hardness exist, scale can form in any water heating equipment, especially when the heater is working under conditions of constant heavy demand and at high temperatures.

In hard water areas, scale formation can occur in hot water systems and hot water heaters. The higher the temperature and volume of water used, the more problematic the scale build-up can be. Water treatment is normally recommended when the hardness reaches 100 – 150ppm (7 – 10 degrees Clark) and above. This problem can be minimised by reducing the water temperature in the heater and by fitting suitable water pre-treatment equipment.

When installing Andrews Water Heaters in hard water areas we would recommend that a water treatment specialist is consulted.

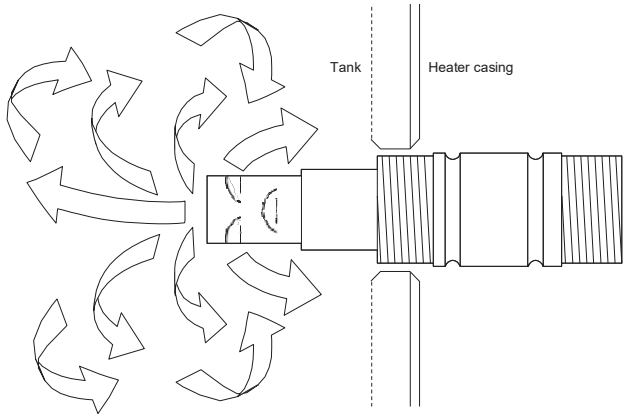

Fig. 13

Each Andrews ECOflo Water Heater includes two factory fitted Correx™ Powered Anodes as standard. These anodes do not need maintenance or replacement. The potentiostat which regulates the current to the Correx™ anode features an indicator light which shows green to indicate the correct function and red to indicate a malfunction. The anodes and potentiostat are available as spare parts if required, (see page 52 for part numbers).

The ECOflo water heater is fitted with the Hydrojet Total Performance System incorporated in the cold inlet nipple. The system is designed to increase turbulence and reduce sediment build-up, reduce thermal stacking and increase delivery.

All models now incorporate the new Hydrojet system on cold inlet side connections. This system ensures water is directed onto the tank base which minimises sediment build-up from day one of installation.

3.26 Water connections

3.26.1 Vented systems

The water heater can be fed from a cold water feed cistern or static water tank.

A safety valve can be fitted as specified in BS 6644 Clause 9.

Minimum 0.8 bar water pressure is required to allow correct operation.

The safety valve must be fitted either directly to an upper tank tapping or not further than one metre along the outlet flow pipe, size not less than the safety valve.

There must be no valve separating the heater from the safety valve.

The size of the discharge pipe must not be less than the nominal size of the safety valve outlet. It should be self-draining. Any water discharged must be visible and create no hazard to persons in or about the building.

A low pressure open vented system can be used or, where the natural circulating pressure is insufficient, pumped circulation can be employed.

The heater must be fitted with an open vent pipe which is not valved and which rises continuously to the open vent. It should be sized with reference to Technical Data, BS 6644 Clauses 9 and 10 and CP 342. Local Regulations and Bye-Laws must be observed when installing the system.

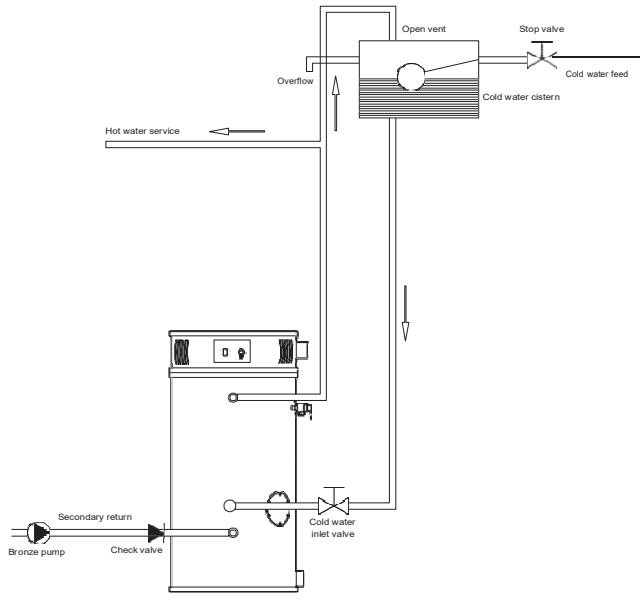

Fig. 14

Front Cold inlet / Front Hot outlet water connections

Assemble onto the 1½” hot water outlet (front) the required fitting using a suitable jointing compound.

Assemble onto the ¾ BSP thread, the ¾ BSP coupler socket and drain cock using a suitable jointing compound.

Water draw-off dead legs should comply with CP 342 Part 2, Table 1 and BS 6700.

Note
When using a secondary return circuit, see Fig. 14 for the location of the return tapping.

It is recommended that all water connections be made to the heater(s) using union fittings for ease of servicing. Pipe support intervals should comply with CP 342, Part 2 Table 4.

After installation of the water system, open the main water supply valve, flush the system and fill the heater. Open the hot taps to allow air to escape from the system. When the system is free of air, close the taps and check for leaks at the thermostats, drain cock and pipe connections on the heater.

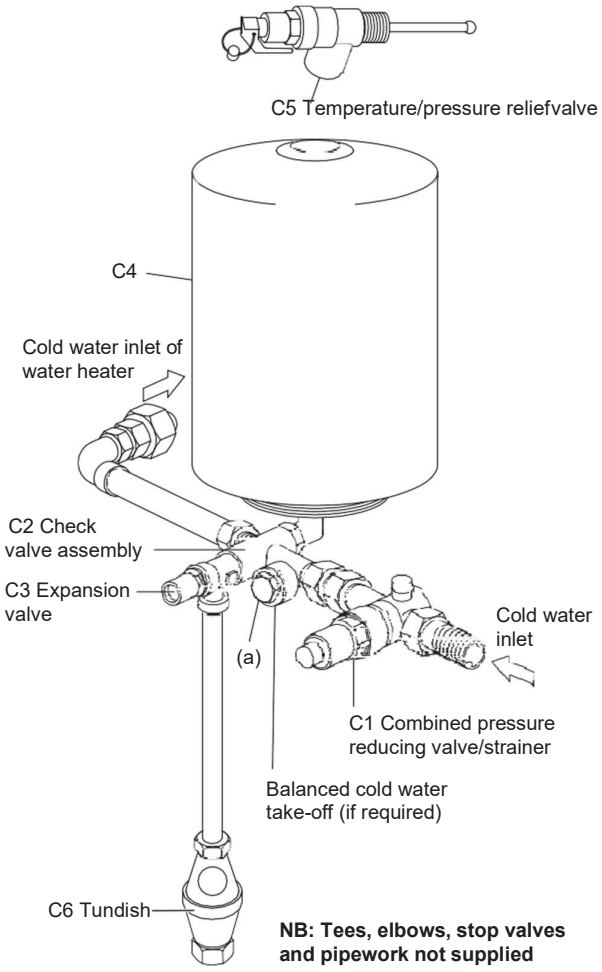

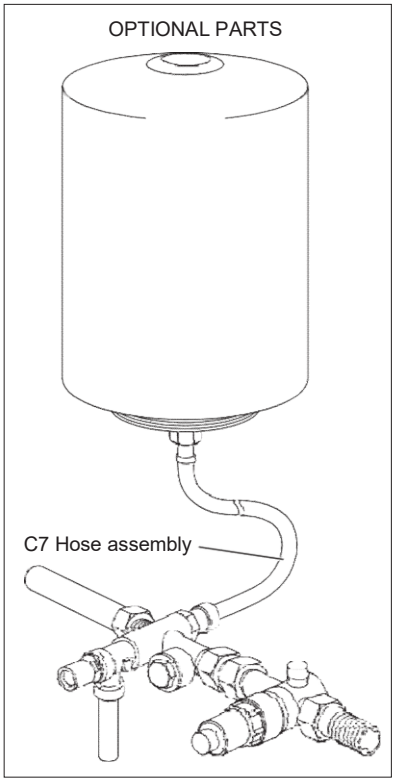

Fig. 16

3.26.2 Unvented systems

Unvented Systems should be fitted by an Approved Installer.

The water heater can be used on unvented hot water storage systems with the addition of an Unvented Systems Kit, available from Andrews Water Heaters.

See Parts List later in document.

When used in an unvented system, the ECOflo will supply hot water at a pressure of 3.5bar (51lbf/in²), provided that this pressure is available at the mains feed. During conditions of no-flow, system pressure may rise to a maximum of 6 bar (87lbf/in²) whilst the burner is operating. When testing the system, it is recommended that a maximum test pressure of 8.6 bar (125lbf/in²) is employed.

The expansion vessel C4 supplied is suitable for the stored volume of the water heater.

FOR SYSTEMS WITH LARGER PIPE VOLUMES OR ADDITIONAL STORAGE, EXPANSION VESSELS WITH MORE CAPACITY ARE AVAILABLE – CONTACT THE ANDREWS SALES OFFICE FOR FURTHER DETAILS.

The combined temperature and pressure relief valve C5, must be installed into the horizontal 1” dia. male tapping. A 1” dia. socket (not supplied) is required as the T&P valve is also a male fitting. The discharge pipe from items C3 and C5 must be connected into tundish C6.

When assembling items C1 and C2, ensure that the flow arrows marked on the components are pointing in the direction of flow, i.e. towards the water heater. The cold water for services may be drawn from the 22mm compression port on item C2(a). The water pressure at this point will be similar to that available at the hot water outlet of the water heater. If port (a) is not used, it should be sealed with the blanking plug supplied.

If higher flow rates are required for the cold water services, a suitable tee fitting should be fitted to the pipework upstream of item C1.

The pipework fitted to the tundish outlet should be one size larger than the outlet pipe of the safety device and should be terminated at a suitable drain.
(See Building Regulations 1992 Approved Document G3).

All fittings and materials must be suitable for use with drinking water and listed in the current Water Research Centre “Materials and Fittings Directory”.

Installation of unvented storage hot water systems must comply with Part G3 of the Building Regulations 1992.

Typical water service layout for unvented system is shown in Fig 17.

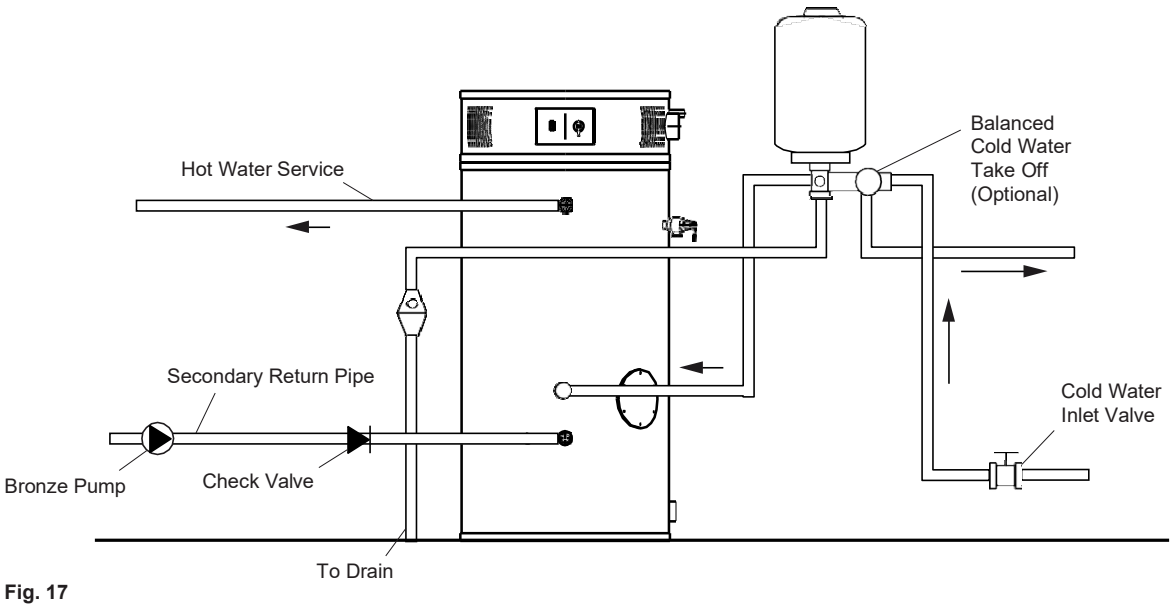

Fig. 17

4 Commissioning

Caution
DO NOT OPERATE THE WATER HEATER UNTIL THE STORAGE VESSEL IS COMPLETELY FILLED WITH WATER, WITH WATER RUNNING FROM ALL HOT TAPS.

Open the main gas supply cock after all connections to the gas control are completed. Test all connections, using propriety leak detection fluid.

4.1 Filling the heater with water

1. Close the water heater drain valve.
2. Open the cold water supply valve.
3. Open several hot water taps to allow air to escape from system.
4. When a steady stream of water flows from the taps, the heater is filled.
5. Close the taps and check for leaks at the drain valve, temperature/pressure relief valve and the hot and cold water connections.

4.2 User's safety guide

For your safety, read this section prior to lighting the appliance.

Warning
1. Always follow manufacturer's instructions when lighting the appliance. Failure to do so may result in damage to property, personal injury or loss of life.
2. Before lighting, check all around the appliance area for gas. Be sure to check at low level because some gas is heavier than air and will settle on the floor.
3. **DO NOT** make any attempt to re-light the appliance if the main burner has extinguished. **Wait at least 5 minutes** to allow for any unburnt gas to disperse. Ventilate the area if possible.

4.2.1 For your safety if you smell gas

1. Turn off gas supply and open windows.
2. Do not operate electrical switches.
3. Extinguish any naked flames.
4. Contact gas supplier if the smell of gas persists.

4.2.2 For your safety

Do not store or use petrol, aerosol or other flammable vapours or liquids in the vicinity of this or any other gas appliance.

4.3 Air/Gas mixture adjustment

The water heater gas/air mixture is adjusted at the factory for the proper mixture for optimum combustion and ignition for the type of gas listed on the rating label. The water heater should operate properly without requiring adjustment with the gas type shown on the rating label.

The following is a guide for the correct mixture adjustment settings in case the gas content is different from the rating label or ignition is not satisfactory. A combustion analyser is necessary for making gas/air mixture adjustments to determine the correct setting.

Do not attempt to adjust the venturi screws without a properly calibrated CO^2/CO combustion analyser. Making the mixture richer without an analyser to monitor the adjustments can result in dangerous levels of carbon monoxide.

4.3.1 G20 (Natural gas, mostly methane) family

The venturi screw depth, when measured with a set of callipers (see Fig. 18), should be approximately 13.0 – 13.5mm. The CO^2 range should be set as detailed in Table 1.
The CO content should be less than 50ppm.
If the CO^2 content is above the correct percentage, turn the venturi screw (see Fig. 19), clockwise half a turn and recheck combustion. Repeat, if necessary, until the correct reading is achieved. Turn the venturi screw anticlockwise if the CO^2 reading is less than the stated figure or the ignitions are not smooth.

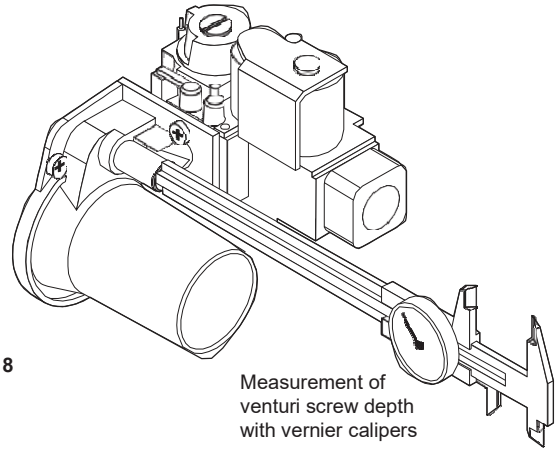

Fig. 18

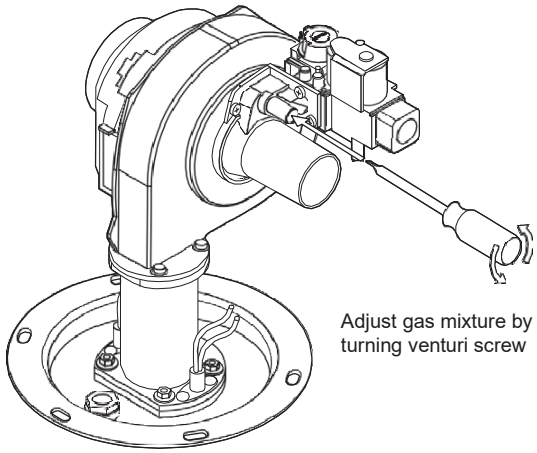

Fig. 19

4.4 CO^2 Percentage

(Natural Gas) - Serial Number up to PMXXXXXXX

Model Reference	Input rating	Combustion	Flue Gas Volume	Vent Temperature
	kW/hr	CO^2/CO	Cubic metres/hr	°C
EC230/600	36.6	11.0%/10 ppm	40	50 – 60
EC230/700	43.9	10.3%/20 ppm	49	50 – 60
EC230/960	58.6	9.7%/10 ppm	63	50 – 60
EC380/740	43.9	10.4%/15 ppm	49	50 – 50
EC380/980	58.6	9.8%/15 ppm	63	50 – 55
EC380/1220	73.2	10.6%/15 ppm	75	50 – 60
EC380/1400	85	11.0%/15 ppm	86	50 – 60
EC380/1900	118.7	11.0%/15 ppm	117	50 – 60

(Natural Gas) - Serial Number from SAXXXXXXX

Model Reference	Input rating	Combustion	Flue Gas Volume	Vent Temperature
	kW/hr	CO^2/CO	Cubic metres/hr	°C
EC230/600	36.6	8.7 - 8.9%/10 ppm	40	50 – 60
EC230/700	43.9	8.8 - 9.0%/20 ppm	49	50 – 60
EC230/960	58.6	8.8 - 9.0%/20 ppm	63	50 – 60
EC380/740	43.9	8.6 - 8.7%/15 ppm	49	50 – 50
EC380/980	58.6	8.8 - 9.0%/20 ppm	63	50 – 55
EC380/1220	73.2	8.8 - 9.0%/20 ppm	75	50 – 60
EC380/1400	85	8.8 - 9.0%/20 ppm	86	50 – 60

Note Serial Nos P = 2017 & M = December / S = 2018 & A = January

5 Operating instructions

Warning
Water heaters are heat-producing appliances. To avoid damage or injury, there must be no materials stored against the water heater or flue system and proper care must be taken to avoid unnecessary contact (especially by children) with the water heater and flue system. UNDER NO CIRCUMSTANCES SHOULD FLAMMABLE MATERIALS, SUCH AS GASOLINE OR PAINT THINNER BE USED OR STORED IN THE VICINITY OF THIS WATER HEATER OR IN ANY LOCATION FROM WHICH FUMES COULD REACH THE WATER HEATER.

Installation or service of this water heater requires ability equivalent to that of a licensed tradesman in the field involved. Plumbing, air supply, flueing, gas supply and electrical work are required.

Light the unit in accordance with the operating instructions label attached to the water heater.

Under no circumstances should the input rate exceed the input rate shown on the water heater rating plate. Over firing could result in damage or sooting of the water heater.

If the unit is exposed to the following, do not operate water heater until all corrective steps have been made by a factory authorized, independent service contractor or qualified service professional.

1. Flooding to or above the level of the burner controls
2. External firing
3. Damage
4. Firing without water
5. Sooting

NEVER OPERATE THE WATER HEATER WITHOUT FIRST BEING CERTAIN IT IS FILLED WITH WATER AND A TEMPERATURE AND PRESSURE RELIEF VALVE IS INSTALLED IN THE RELIEF VALVE OPENING OF THE WATER HEATER (UNVENTED INSTALLATIONS ONLY).

5.1 General instructions

5.1.1 To fill the water heater

1. Close the water heater drain valve by turning the knob or valve stem clockwise. If alternative water connections are provided but not used, make certain they are plugged (i.e. side connections).
2. Open the cold water supply shut-off valve.
3. Open several hot water taps to allow air to escape from the system.
4. When a steady stream of water flows from the taps, the water heater is filled. Close the taps and check for water leaks at the water heater drain valve, combination temperature and pressure relief valve and the hot and cold water connections.

5.1.2 Sequence of operation

1. A call for heat from thermostat
2. Blower ON
3. Pressure switch contacts closed (no exhaust pipe blockage)
4. Blower pre-purge
5. Igniter warm-up
6. Main burner ON
7. Flame signal confirmed
8. Thermostat satisfied
9. Main burner OFF
10. Blower post-purge

5.2 Lighting instructions

5.2.1 For your safety read before lighting

Warning
If you do not follow these instructions exactly, a fire or explosion may result causing property damage, personal injury or loss of life.

I This appliance does not have a pilot. It is equipped with an ignition device which automatically lights the burner. Do not try to light the burner by hand.

II BEFORE OPERATING smell all around the appliance for gas. Be sure to smell near to the floor because some gas is heavier than air and will settle on the floor.
WHAT TO DO IF YOU SMELL GAS
- Do not try to light any appliance
- Do not touch any electric switch
- Do not use any telephone in the building
- If you cannot reach your gas supplier, call the fire brigade.

III Turn off mains power to the water heater.

IV Do not use this appliance if any part has been under water. Immediately call a qualified service technician to inspect the appliance. Replace any part of the control system and any gas control which has been under water.

5.3 Temperature adjustment

During the winter season or any cold period, you may desire a higher temperature setting to adjust for the cold incoming water. This adjustment, however, may cause additional condensation to form on the colder tank surface. This does not mean the tank is leaking. During summer months, the warmer incoming water temperatures will benefit the performance of your water heater and reduce the amount of condensation developed.

Condensation does not mean your tank is leaking. Most of reported tank leaks on installation's are proven to be condensation. To avoid unnecessary inconvenience and expense, make sure the tank is actually leaking before contacting Andrews Water Heaters.

Caution

This water heater is equipped with an energy cut out device to prevent overheating. Should overheating occur or if the gas supply fails to shut off, turn off the manual gas control valve to the appliance and call a qualified service company.

5.4 Burner flame check

If the water heater is to remain idle for 30 days or more, or is subjected to freezing temperatures while shut off, the water heater and piping should be fully drained and the drain valve should be left fully open. Refer to the relevant section of the Installation and Operating Instructions Manual for the procedure on draining the water heater. When properly installed and adjusted, the heater will require minimal attention. Should it become necessary to completely drain the heater, follow instructions given in Section 4, Commissioning.

5.5 Eco (energy cut-off)

The heater is equipped with an ECO (Energy Cut-Off) device, fitted to the control thermostat. It is a temperature sensitive switch which opens at high temperature, shutting off gas to the burner in an overheat condition. When the water has cooled sufficiently, the manual reset on the ECO needs to be depressed to allow the heater to be re-lit. If the burner shuts down and is associated with high water temperature, the ECO is probably operational and the cause of overheating should be investigated.

5.6 Temperature stratification (stacking)

When small amounts of hot water are drawn repeatedly, the thermostat responds to each feed of cold water and activates the main burners. Each time this occurs, more heat may be put back in the tank than was drawn off. As this continues, water in the upper level of the tank gets hotter than the thermostat setting. The hotter water does not mix completely with the cold inlet water, but rises in a ‘chimney effect’ to the top of the tank. Many repetitions of this over a short time results in accumulation of excessively hot water in the upper part of the tank, even when the thermostat control is within limits. This is known as stacking.

To counter this condition, an upper thermostat phial is fitted which senses abnormally hot water and shuts down the main burner until the water cools. Most modern commercial pipe installations include a pumped secondary return system which keeps hot water moving continuously throughout the heater. This stabilises temperatures in the water heater tank and throughout the pipe system.

5.7 Temperature selection procedure

For energy efficient operation of your water heater, the suggested initial temperature setting is 49°C.

Condensation does not mean your tank is leaking. Over 40% of reported tank leaks on installation's are proven to be condensation. To avoid unnecessary inconvenience and expense, make sure the tank is leaking before calling a service person.

Warning
If the water heater display does not show 'Operational' in the 'Status' indicator, there may be an operating malfunction with the water heater. If this is the case, a numeric code will be displayed. Refer to the label next to the display for the definition of the error code and call your plumbing professional or service agent to service the water heater. Do not try to reset the water heater without having a qualified service person to diagnose and correct the problem. If the display is blank or does not show an error code, make sure there is power to the water heater.

Setting the water temperature to the maximum setpoint can result in scalding hot water delivered to the taps. It is highly recommended that the maximum setpoint be adjusted to the lowest possible for the needs of the installation. See following section to change the maximum setpoint limit (max setpoint). Make sure the water heater control display is not in a public area that can result in the temperature settings being improperly adjusted. See previous warning on scalds and an ASSE approved mixing valve.

Note
When the maximum setpoint is reached, the display will show 'Max Setpoint' without the setpoint value. The maximum setting is equal to approximately 82°C.
The default temperature setpoint from the factory is 21°C.

5.7.1 Water heater display and control buttons

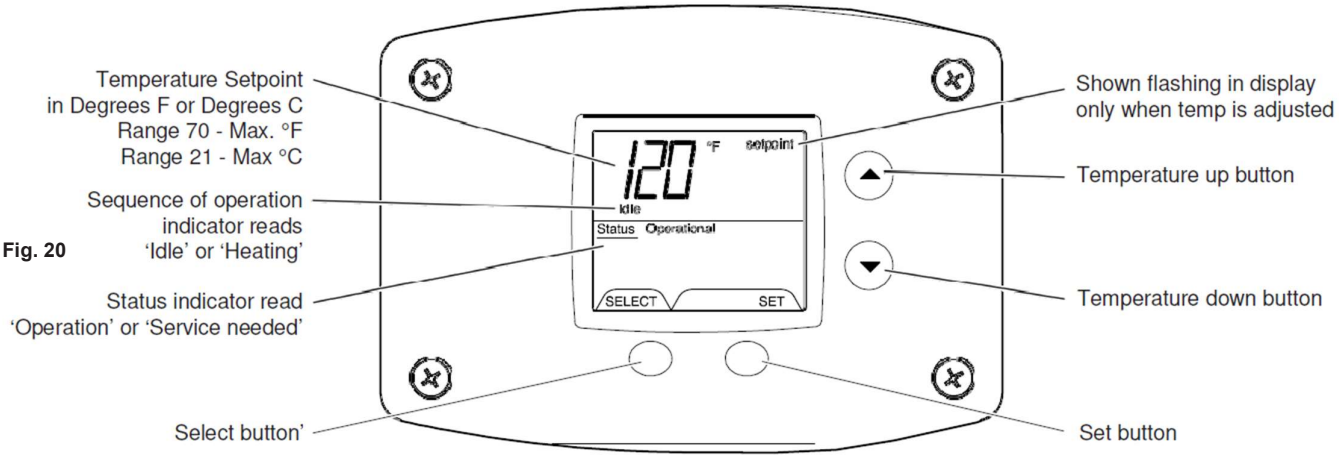

Fig. 20

5.7.2 To increase Setpoint temperature

1. Depress and hold 'Temperature Up' button until desired setpoint temperature appears in the display (Fig. 21).

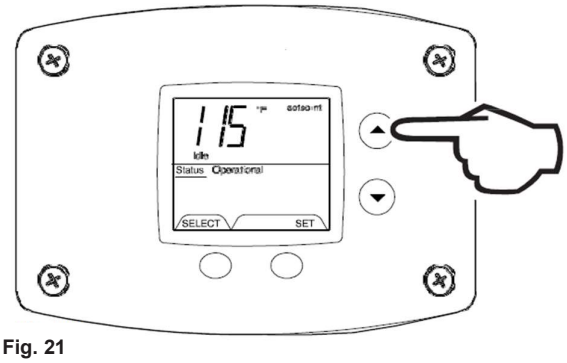

Fig. 21

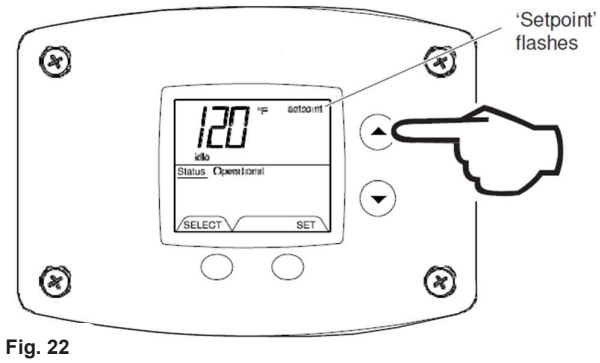

Fig. 22

2. 'Setpoint' indicator begins flashing in the display after pressing 'Temperature Up' button (Fig. 22).

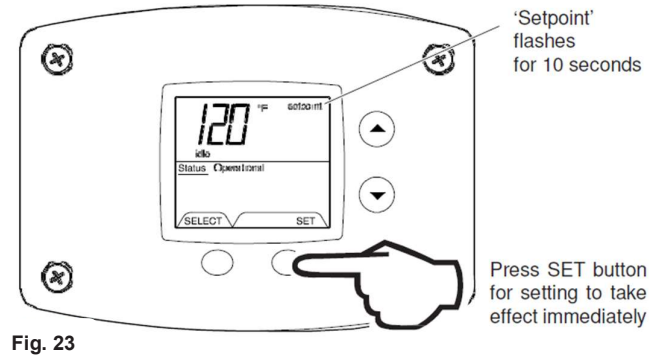

Fig. 23

3. Press 'SET' button for new setting to take effect immediately. 'Setpoint' will stop flashing. If the "SET" button is not pressed, the new temperature setting will take effect in approximately 10 seconds (Fig. 23).

5.7.3 To decrease Setpoint temperature

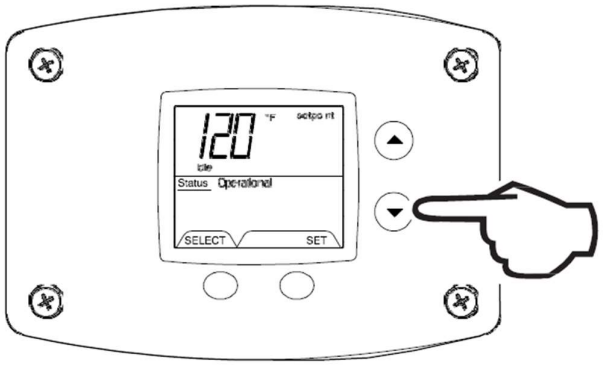

Fig. 24

1. Depress and hold ‘Temperature Down’ button until desired setpoint temperature appears in the display (Fig. 24).

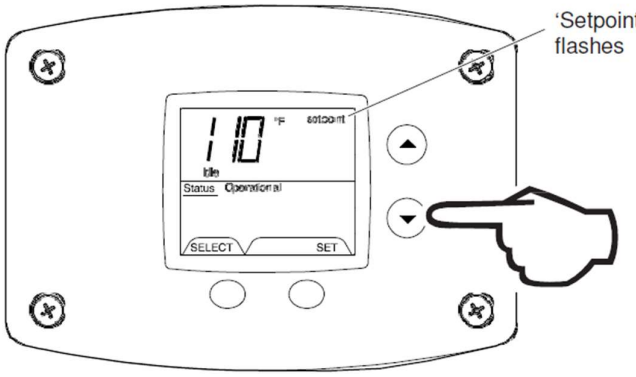

Fig. 25

2. ‘Setpoint’ indicator begins flashing in the display after pressing ‘Temperature Down’ button (Fig. 25).

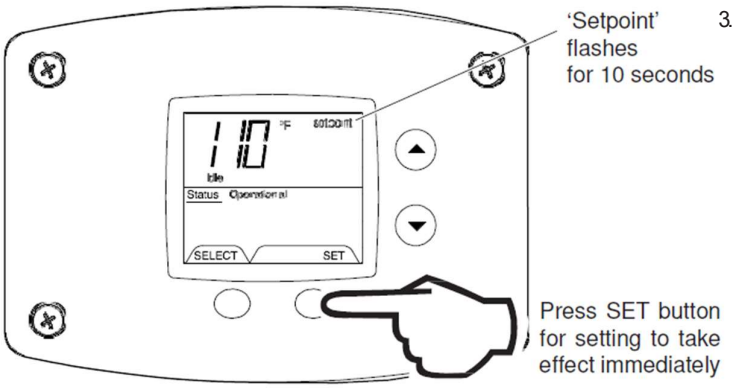

Fig. 26

3. Press ‘SET’ button for new setting to take effect immediately. ‘Setpoint’ will stop flashing. If the ‘SET’ button is not pressed, the new temperature setting will take effect in approximately 10 seconds (Fig. 26).

5.7.4 To change temperature format in display from °F to °C or °C to °F

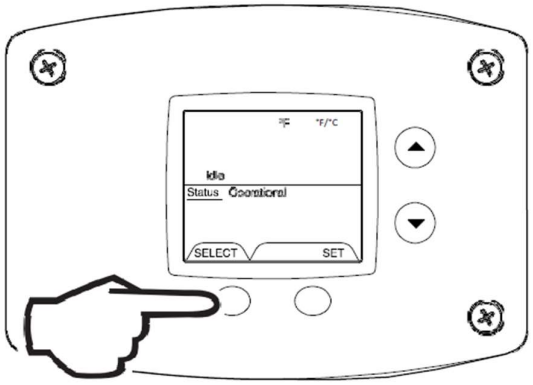

Fig. 27

1. Press ‘SELECT’ button until °F/ °C is displayed (Fig. 27).

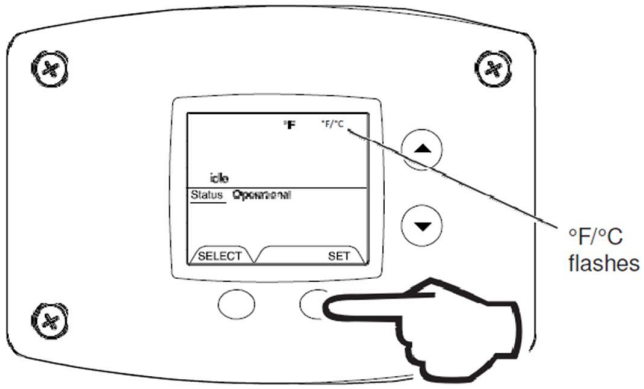

Fig. 28

2. Press ‘SET’ button to change temperature format. Symbol °F/ °C will flash (Fig. 28).

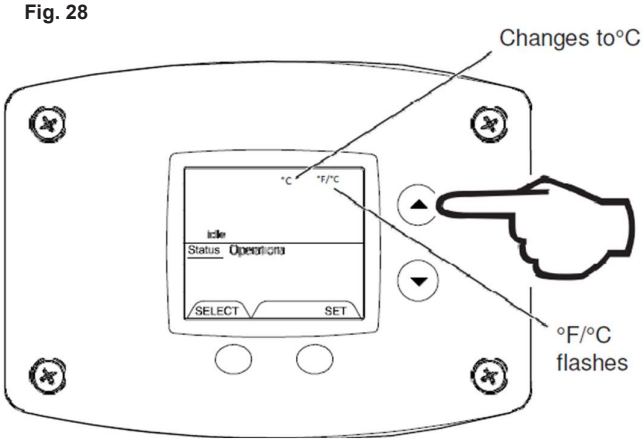

Fig. 29

3a. Press ‘Temperature Up’ button to change temperature format to °C (Fig. 29).

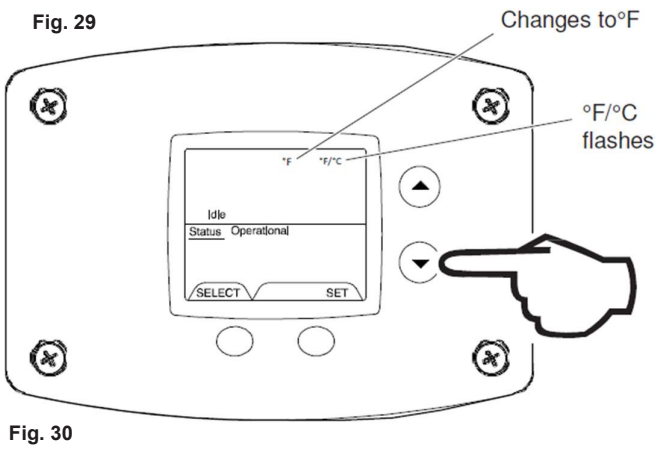

Fig. 30

3b. Press ‘Temperature Down’ button to change temperature format to °F (Fig. 30).

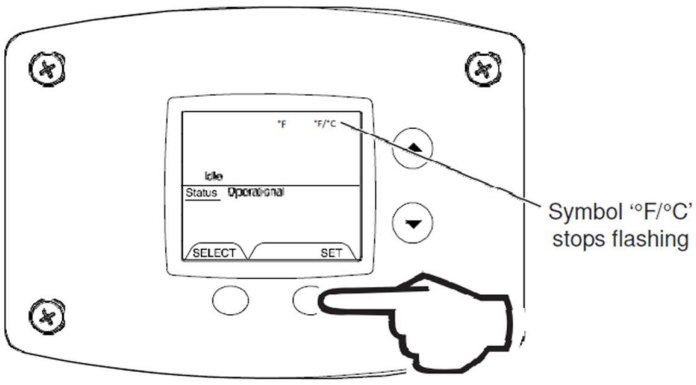

Fig. 31

4. Press 'SET' button to confirm °F or °C format. F°/ °C will stop flashing. Setpoint display will appear in the format selected (°F or °C) in 10 seconds (Fig. 31).

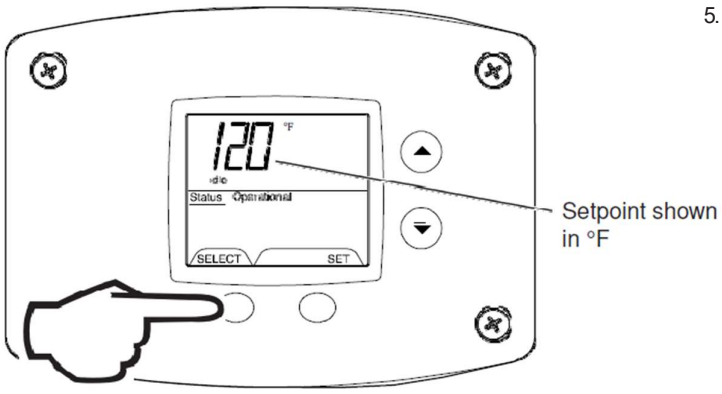

Fig. 32

5. Pressing 'SELECT' button will return display to setpoint in format selected (°F or °C) immediately (Fig. 32).

An automatic gas shut-off device (ECO) is incorporated in the sensor and control board which will shut off all gas supply to the burner and pilot if the water heater temperature exceeds 93°C Should the ECO function (open), the water temperature should be reduced to approximately 49°C and follow applicable Lighting Instructions to place the water heater in operation. The water heater must have the problem corrected by a qualified service person before putting the water heater back in operation. It is recommended that all service work be performed by a qualified service agency.

If the water heater is to remain idle for 30 days or more or is subjected to freezing temperatures while shut off, the water heater and piping should be fully drained (See "To Drain the Water Heater") and the drain valve should be left fully open.

Warning
Hydrogen gas can be produced in an operating water heater that has not had water drawn from the tank for a long period of time (generally two weeks or more). Hydrogen gas is extremely flammable. To prevent the possibility of injury under these conditions, we recommend the hot water faucet to be open for several minutes at the kitchen sink before you use any electrical appliance which is connected to the hot water system. If hydrogen is present, there will be an unusual sound such as air escaping through the pipes as hot water begins to flow. Do not smoke or have open flame near the faucet at the time it is open.

5.8 Burner flame check

At the time of installation and at periodic intervals (about every 3 months), a visual check of the pilot and burner flames should be made to determine if they are burning properly.

Note

IMPORTANT- In the event of an emergency, turn off the gas and electric (if applicable) to the appliance.

IMPORTANT- The water heater should be inspected at a minimum annually by a qualified service technician for damaged components and/or joints not sealed. DO NOT operate this water heater if any part is found damaged or if any joint is found not sealed.

Warning

Water heaters are heat producing appliances. To avoid damage or injury there shall be no materials stored against the water heater or vent system, and proper care shall be taken to avoid unnecessary contact (especially by children) with the water heater and vent system.

UNDER NO CIRCUMSTANCES SHALL FLAMMABLE MATERIALS, SUCH AS GASOLINE OR PAINT THINNER BE USED OR STORED IN THE VICINITY OF THIS WATER HEATER, VENT SYSTEM OR IN ANY LOCATION FROM WHICH FUMES COULD REACH THE WATER HEATER OR VENT SYSTEM.

5.9 Direct spark

“DIRECT SPARK” IGNITION (DSI) SYSTEM COMPONENTS

Resideo S9380B1001C Direct Spark Ignition Control, CE listed. 3 Trials for Ignition, 30 second pre-purge timing, 4 second trial for ignition, 24 volt input to control and integrated temperature/high limit control.

PSE spark and flame sense rods.

Resideo VK8115 gas valve (negative pressure regulator) with matched venturi sizes for mixing gas with combustion air.

EBM RG130 (36-6 and 43-9 kW/hr. input sizes) and RG148 (58-3 through 85-0 kW/hr. inputs) pre-mix combustion blowers. 230 volts, 50/60 Hz.

Burner: Acotech (Bekaert Combustion Technology) Pre- mix burner with stainless steel mesh outside knit.

Blocked Vent Pressure Switch: Resideo IS20378-5770 normally closed pressure switch. Contacts open in the event of a severe blockage of the flue outlet.

5.10 Thermostat and high limit

THERMOSTAT AND HIGH LIMIT CONTROLS

Resideo S9380B1001C Direct Spark Ignition Control. Temperature adjustment range: 21°C to maximum of 85°C. Differential set to 5°C. Resideo sensor bulb 5000-1464 series is inserted into drywell.

6 Servicing

The following maintenance should be performed by a qualified service technician at the minimum periodic intervals suggested below. In some installations, the maintenance interval may be more frequent depending on the amount of use and the operating conditions of the water heater. Regular inspection and maintenance of the water heater will help to insure safe and reliable operation.

1. Annual checks of the ignition systems (millivolt and electronic), temperature controls and any other water heater controls are necessary to ensure proper operation. Also, all safety shut-off valves must be checked to verify proper operation and tightness.
2. The flow of combustion and ventilation air **MUST NOT** be restricted. Clear the combustion air openings of any dirt, dust, or other restrictions. **WARNING!** The combustion ventilation system may be **HOT**.
3. At all times keep the water heater area clear and free f from combustible materials, gasoline and other flammable vapors and liquids.
4. Bi-annually conduct a visual check of the pilot and burner flames to determine that they are burning properly. See “Burner Flame Check” section for example of proper burner flame pattern.
5. Annually remove the main burner rack assembly to clean orifices and related parts of any dirt or other foreign material. Inspect the burner ports for obstructions or debris and clean with a wire brush, vacuum, or use a mild detergent solution to clean as needed.

Note
It is imperative for proper operation of the water heater that the main burner rack be replaced in the original location.

Warning
When lifting lever of the combination temperature and pressure relief valve, hot water will be released under pressure. Be careful that any released water does not result in bodily injury or property damage.

Keep clear of the combination temperature and pressure relief valve discharge line outlet.
The discharge may be hot enough to cause scald injury. The water is under pressure and may splash.

6. At least once a year, check the combination temperature and pressure relief valve to insure that the valve has not become encrusted with lime. Lift the lever at the top of the valve several times until the valve seats properly without leaking and operates freely.

Note
IMPORTANT- If the combination temperature and pressure relief valve on the appliance discharges periodically, this may be due to thermal expansion in a closed water supply system. Contact the water supplier or local plumbing inspector on how to correct this situation. Do not plug the combination temperature and pressure relief valve outlet.

7. Monthly drain off a gallon of water to remove silt and sediment. **WARNING!** This water may be **HOT**.
8. All models are equipped with a cleanout opening to aid in removal of hard water deposits from the tank bottom. If this water heater operates under hard water conditions, the following should be performed at least every 3 months: Drain the water heater. Remove the cleanout jacket cover and tank cover. When cleaning the tank, care must be taken to avoid trying to break deposits loose as this could damage the glass lining and shorten the life of the water heater. After cleaning, replace the cleanout tank cover and jacket cover, and refill with water.
9. A sacrificial anode rod has been installed to extend tank life. The anode rod should be inspected annually (every year) and replaced when necessary to prolong tank life. Water conditions in your area will influence the time interval for inspection and replacement of the anode rod. Contact the plumbing professional who installed the water heater or the manufacturer listed on the rating plate for anode replacement information. The use of a water softener may increase the speed of anode consumption. More frequent inspection of the anode is needed when using softened (or phosphate treated) water. However, the new models have Correx anodes that do not require inspection or replacement.
10. The venting system must be inspected at least once a year to ensure against leakage of exhaust products.

Caution
FOR YOUR SAFETY, **DO NOT** ATTEMPT REPAIR OF COMBINATION GAS CONTROL, BURNERS OR GAS PIPING. REFER REPAIRS TO A QUALIFIED SERVICE TECHNICIAN.

6.1 Introduction

Servicing must be carried out by a properly qualified person.

Whilst giving these instructions for the care of the ECOflo, it is recommended that checks are carried out by the installer or local gas service engineer at least annually. Ensure good ventilation by keeping the heater free of extraneous materials and clear of dust and lint. Keep pipework, flue and tops of heaters clear of any combustible materials. A water softener or scale inhibitor should be employed in hard water areas. The heater should be inspected every few months via the hand hole cleanout and scale or silt deposits removed. Failure to do so will shorten heater life and may invalidate the warranty.

6.2 Pre-service operations

Before servicing, carry out the following operations.

1. Turn off the gas service cock.
2. Turn off the cold water supply to the heater.
3. Turn on the hot water draw-off taps served by the water heater, or, for multiple installations, turn off the hot water outlet connection valve and secondary return valve.
4. Drain down using the drain valve on the heater.

6.3 Annually

Annual checks of the ignition systems, temperature controls and any other controls are necessary to ensure continued safe and efficient operation.

The entire combustion system must be sealed for this water heater to function correctly. Replace any damaged parts. Please see pages 86 & 90 showing the gaskets to inspect to ensure they are combustion tight.

The entire exhaust flue system and combustion air supply must be inspected at least annually for integrity of all joints and gaskets.

6.4 General

KEEP APPLIANCE AREA CLEAR AND FREE FROM COMBUSTIBLE MATERIALS, PETROL AND OTHER FLAMMABLE VAPOURS AND LIQUIDS.

Water heater maintenance includes periodic tank flushing and cleaning, and removal of lime scale. The unit should be inspected and adjusted to maintain proper combustion. A periodic inspection of the flue installation system should be made.

6.5 Maintenance schedule

Following are the instructions for performing some of the recommended maintenance. Unit inspection and adjustment should be performed by a competent qualified engineer.

Component	Operation	Interval	Required
Tank	Sediment Removal	Annually	Flushing
Relief Valve	Check Operation	Annually	Proper Operation
Exhaust & Air Intake System	Inspect	Annually	Joints should be sealed
Ignition System	Inspect	Annually	Clean off dust and dirt
Flue Vent Terminal	Clean Inlet Screen	Annually	Soft Brush
Flue Terminal – Horizontal or Vertical	Free of Shrubs & Debris	Annually	Remove object that caused restriction
Combustion System	Inspect	Annually	Confirm S-OP
Condensate Waste Pipe	Inspect	Every 6 months	Remove restriction

6.6 Correx powered anodes

As Correx Powered Anodes are fitted as standard to this appliance, no maintenance is necessary.

6.7 Flushing water heater

1. Turn OFF the water heater electrical disconnect switch.
2. Open the drain valve and allow water to flow until it runs clean.
3. Close the drain valve when finished flushing.
4. Turn ON the water heater electrical disconnect switch.

6.8 Draining water heater

The water heater must be drained if it is to be shut down and exposed to freezing temperatures. Maintenance and service procedures may also require draining the water heater.

1. Turn off the water heater electrical disconnect switch.
2. Connect a hose to the drain valve.
3. Locate hose's discharge in an area where hot water will not cause any damage or injury.
4. Close the cold water inlet valve to water heater.
5. Open a nearby hot water tap to vent the system
6. Open the heater drain valve.
7. If the water heater is being drained for an extended shutdown, it is suggested the drain valve be left open during this period.

6.9 Filling water heater

1. Close the water drain valve by turning the knob or valve stern clockwise. If alternative water connections are provided but not used, make certain they are plugged (i.e. side connections).
2. Open the cold water supply shut-off valve.
3. Open several hot water taps to allow air to escape from the system.
4. When a steady stream of water flows from the taps, the water heater is filled. Close the taps and check for water leaks at the water heater drain valve, combination temperature and pressure relief valve and the hot and cold water connections.

6.10 Sediment and limescale

Waterborne impurities consist of the particles of soil and sand, which settle out and form a layer of sediment on the bottom of the tank.

The amount of calcium carbonate (scale) released from water is in direct proportion to water temperature and usage. The higher the water temperature or water usage, the more scale deposits are dropped out of the water. This is the limescale, which forms in pipes, water heaters and on cooking utensils.

Scale accumulation not only reduces the life of the equipment but also reduces efficiency of the water heater and increases fuel consumption.

The usage of water softening equipment greatly reduces the hardness of the water. However, this equipment does not always remove all of the hardness (scale). For this reason, it is recommended that a regular schedule of de-scaling be maintained.

The depth of the build-up should be measured periodically. Water heaters will have about 3 inches of scale build-up when the level of scale has reached the bottom of the cleanout opening or about 1 inch of scale build-up if it has reached the drain valve opening. A schedule for de-scaling should be set up, based on the amount of time it would take for a ½ inch build-up of scale.

Note

Example: Initial inspection shows ½ inch of scale accumulation. Therefore, the water can be de-scaled once a year.

6.10.1 To remove sediment and limescale

1. Drain the heater. Refer to DRAINING THE WATER instructions in this section.
2. Remove outer cover plate from lower side of water heater jacket.
3. Remove cover and gasket from cleanout opening.
4. Remove lime scale or sediment taking care not to damage the glass-lining.
5. Inspect cleanout plate gasket: Replace gasket if necessary (refer to parts list on page 52).
6. Install gasket and cleanout plate. Be sure to draw plate up tight by tightening bolts securely.
7. Close the drain valve. Open a hot water fixture to allow air to escape. Open the cold water supply to water heater and allow the tank to fill. Follow the lighting instructions.
8. Check for water leakage.
9. Install outer jacket cover plate.

6.11 To replace a correx anode

The Correx Powered Anodes on this water heater are easily accessible from the top of the water heater, under the insulation, towards the front of the appliance by the burner assembly, making replacement (if necessary) simple and quick. Use the following procedure to replace the anodes.

1. Drain the heater. Refer to DRAINING THE WATER HEATER instructions in this section.
2. Flush the heater. Refer to FLUSHING THE WATER HEATER instructions in this section.
3. Remove the combustion surround top by unlatching.
4. Locate the hexagonal head of the anode(s) beneath the tank insulation.
5. Remove the anode using a socket of the appropriate size. Do not use an impact wrench.
6. Replace the anode as required. No pipe tape or sealant is required when reinstalling the anode.
7. Close the drain valve. Open a hot water fixture to allow air to escape. Open the cold water supply to water heater and allow the tank to fill.
8. Check your anode and drain valve for leaks.
9. Replace insulation previously removed.
10. Replace combustion surround top and latch it securely in place.
11. Follow the lighting instructions.

6.12 Drain valve and tank access panel

The water heaters are equipped with a ¾ inch drain valve. An access panel covers the cleanout opening in the tank, which is sealed by a gasket and cover.

6.13 Cleaning the storage vessel

The storage vessel should be checked and cleaned annually.

Scale formation in the base of the vessel may occur, particularly in hard water areas, and is normally associated with high usage and high water temperatures. It is characterised by a rumbling noise when the main burner is lit. Scale formation in the base of the vessel will affect the efficiency of the water heater and reduce the life of the storage vessel.

It should be noted that the failure of the storage vessel due to scale formation on the base will not be covered by the terms of the warranty.

Any scale formation which cannot be removed by normal means of cleaning should be removed by chemical descaling. See below.

6.14 Descaling

When descaling the heater, attention is drawn to the following guidelines:

Caution
DUE TO THE CORROSIVE NATURE OF DESCALING FLUID, IT IS ESSENTIAL THAT SUITABLE PROTECTIVE CLOTHING IS USED AND ADEQUATE VENTILATION AVAILABLE.

1. Turn gas control to OFF and isolate gas supply.
2. Close water inlet valve and drain heater tank.
3. Remove magnesium anode(s). It is recommended that new anode(s) is (are) fitted.
4. Add suitable hydrochloric acid based descale fluid. The requirement is normally 10 litres or more dependent on the amount of limescale present.
5. After a minimum of one hour, restore gas supply and turn on main gas burner for 2 minute maximum.
6. Isolate gas supply and drain descale fluid through drain port.
7. Open cold water feed valve and fill heater tank.
8. Drain and flush out heater for 20 minutes minimum.
9. Replace anode(s)
10. Restore gas supply and re-light heater.

Note
IMPORTANT- Remove Correx Powered Anodes if fitted and plug off the connections using ¾" BSP plugs. Re-fit the Correx Powered Anodes when the descaling operation is complete.

6.15 Restart

Re-light and carry out commissioning checks as detailed in Section 4, Commissioning. Set the thermostat control to the required user setting.

6.16 Combined temperature/pressure relief valve

At least twice a year, the temperature and pressure relief valve should be checked to ensure that it is in operating condition. To check the relief valve, lift the lever at the end of the valve several times. The valve should sit properly and operate freely.

If water does not flow, remove and inspect for obstructions or corrosion. Replace with a new valve of the recommended size as necessary. A thorough inspection of the valve should be performed at least every three years by removing the temperature and relief valve from the tank. Do not attempt to repair the valve as this could result in improper operation and a tank explosion. In areas with poor water conditions, it may be necessary to inspect the T&P valve more often than the recommended maintenance schedule.

Caution

Before manually operating the valve, make sure that a drain line has been attached to the valve to direct the discharge to an open drain. Failure to take this precaution could mean contact with extremely hot water passing out the valve during this checking operation.

If the temperature and pressure relief valve on the water heater discharges periodically or continuously, it may be due to thermal expansion of water in a closed water supply system or due to a faulty relief valve.

Thermal expansion is the normal response of water when it is heated. In a closed system, thermal expansion will cause the system pressure to build until the relief valve actuation pressure is equalled. The relief valve will then open allowing some water to escape, slightly lowering the pressure.

6.17 Combustion system inspection

Inspect the operation of the combustion system monthly. Use the following procedure to inspect the combustion system.

1. Turn off the main power switch of the water heater.
2. Adjust the thermostat to the Min. setting.
3. Remove the top of the combustion surround by unlatching it.
4. While observing the ignition module, turn on the main power switch.
5. Adjust thermostat to the Max. setting.
6. Watch the LED’s light as the controller goes through the S-OP as previously described.
7. Upon ignition, observe the main burner flame.
8. Readjust thermostat to previous setting.
9. Replace combustion surround top and latch it securely in place.

6.18 Accessing service mode on the water heater display (Service personnel only)

The display has a ‘service mode’ for changing the maximum setpoint and accessing information in aiding servicing of the water heater. This procedure is for service and installation personnel only. To enter the Service Mode, follow the steps illustrated below:

Warning
The following procedure is for service and installation personnel only. Resetting lockout conditions without correcting the malfunction can result in a hazardous condition.

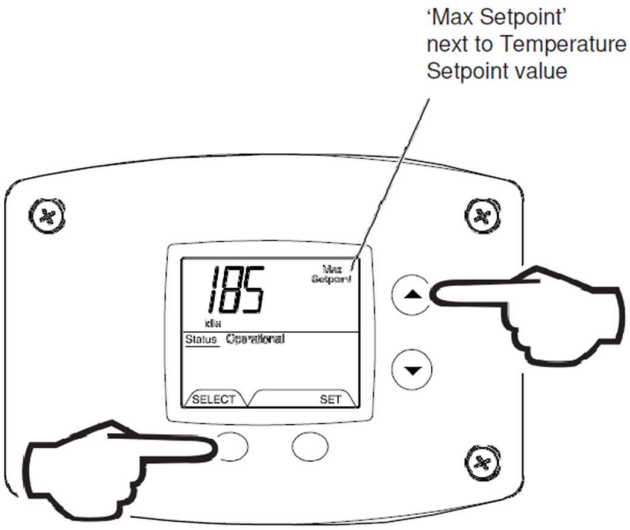

Fig. 33

1. Press ‘Select’ and ‘Temperature Up’ buttons together and hold for 3 seconds until ‘Max Setpoint’ is shown in the display (Fig. 33).

Note
30 Seconds after the last button press, the display will automatically return to the ‘User Mode’.
Simultaneously pressing the ‘Select’ and ‘Temperature Up’ buttons will switch the display immediately to the ‘User Mode’.

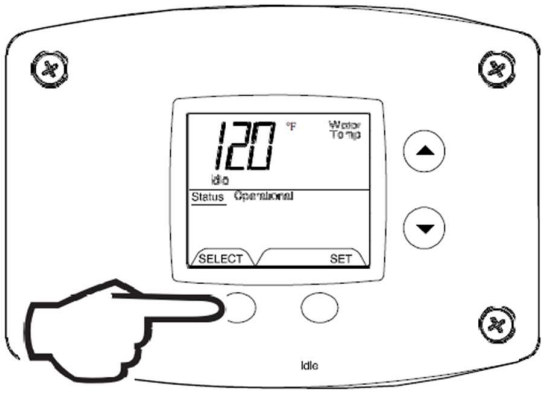

Fig. 34

2. Pressing ‘Select’ button will change display to next mode (Fig. 34).

6.18.1 Sequence of modes available in ‘Service Mode’ by pressing the ‘Select’ button

Error Code Number (Display/Reset). This is only shown if there is an operating error in the ‘User Mode’ (Fig. 35).

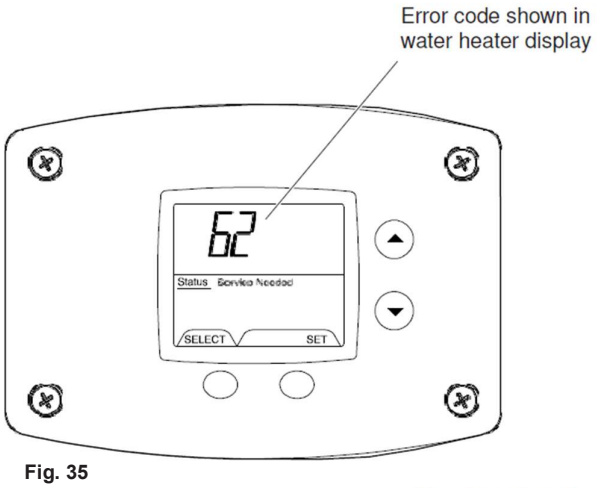

Fig. 35

1. Max Setpoint (Display/Change) (Fig. 36).

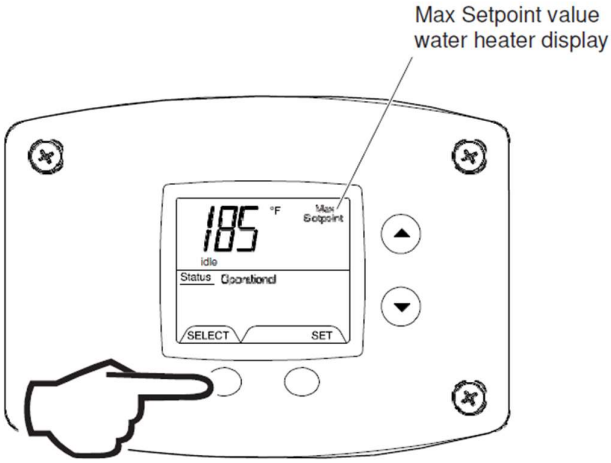

Fig. 36

2. Water Temperature Average (Displays average if there are two sensors – sensor temperature displayed if single sensor is used) (Fig. 37).

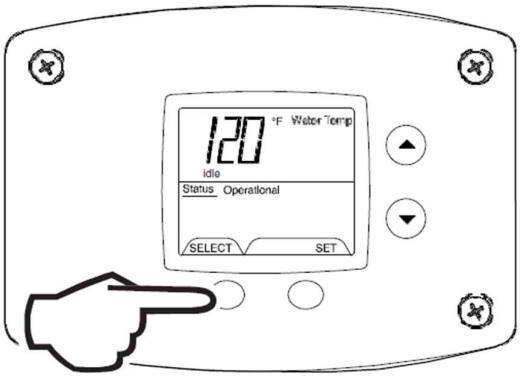

Fig. 37

2b. Water Temperature - Upper Sensor (Displays if there is an upper sensor – some models) (Fig. 38).

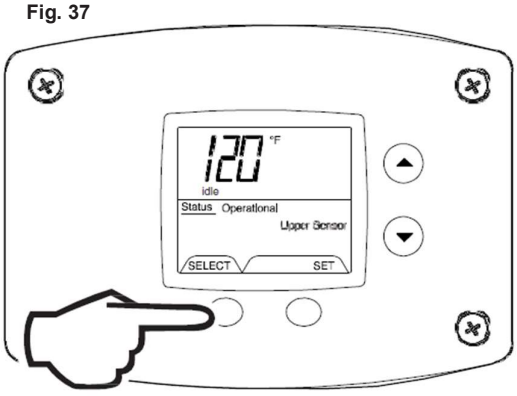

Fig. 38

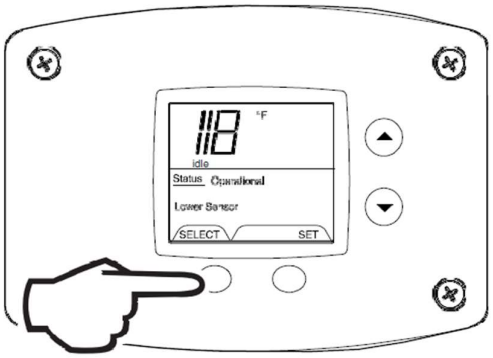

Fig. 39

2c. Water Temperature - Lower Sensor (Displays if there are two sensors) (Fig. 39).

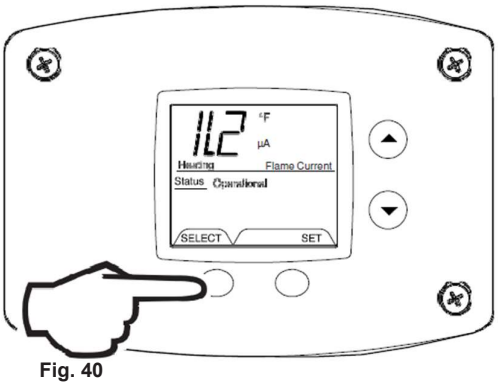

Fig. 40

3. Flame Current of Pilot Flame Sensor (Displays only in the Heating Cycle) (Fig. 41).

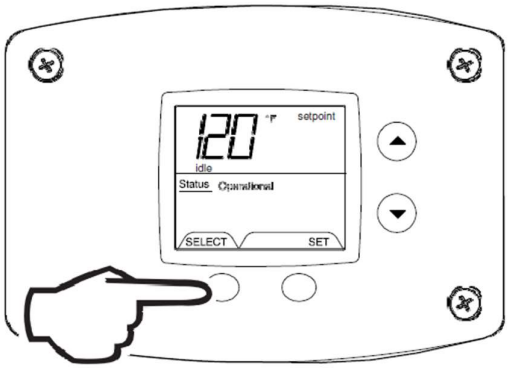

Fig. 41

4. Setpoint (Display/Change) (Fig. 41).

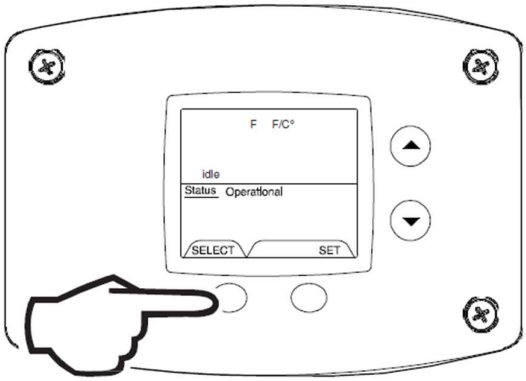

Fig. 42

5. °F/°C (Display/Change) (Fig. 42).

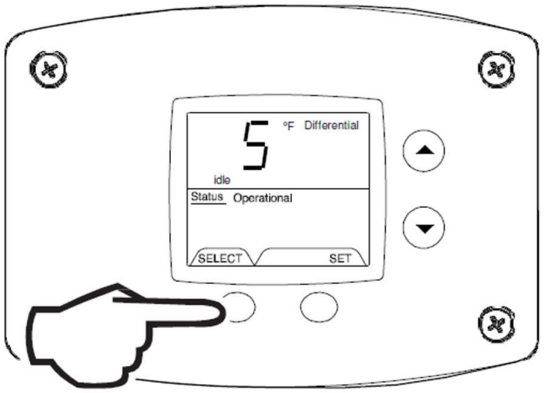

Fig. 43

6. Differential (Display only – shows the differential ofthe thermostat) (Fig. 43).

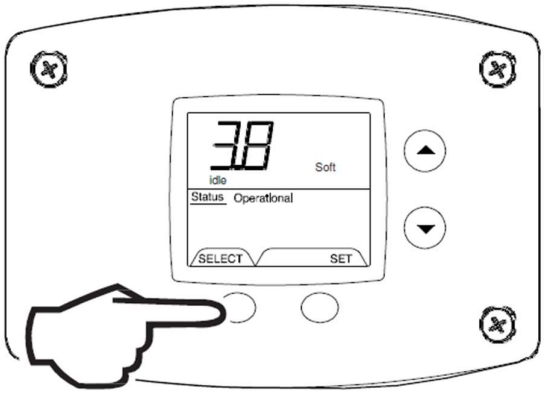

Fig. 44

7. Software Version (Display only) (Fig. 44).

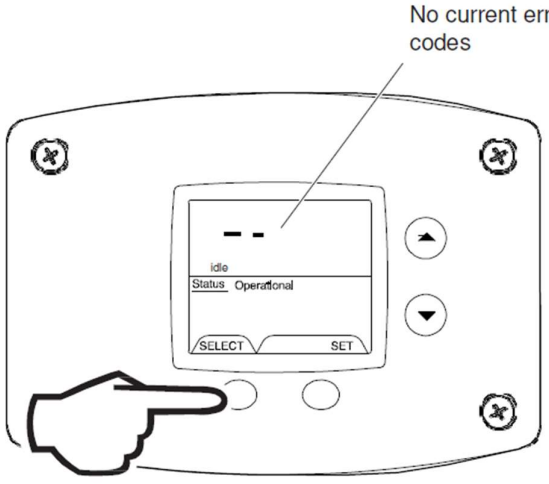

Fig. 45

8. Error Code History (Displays if there are present error codes or up to 10 previous error codes). Water Heater Display will show -- if there are no error codes (Fig. 45).

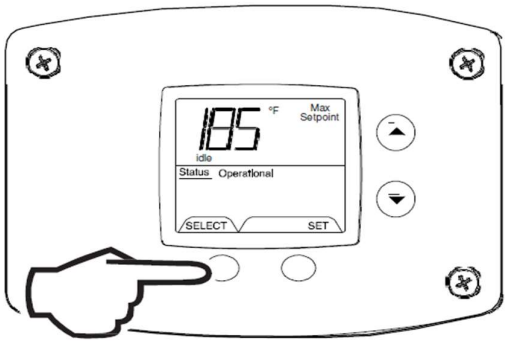

Fig. 46

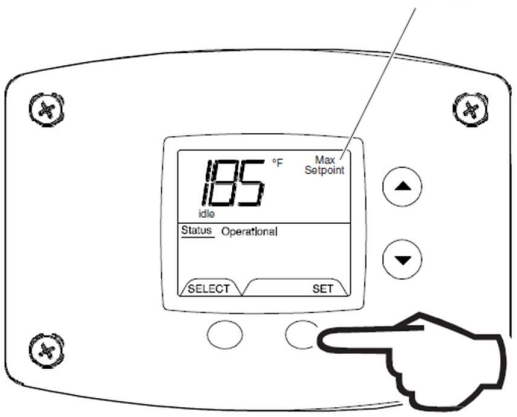

Fig. 47

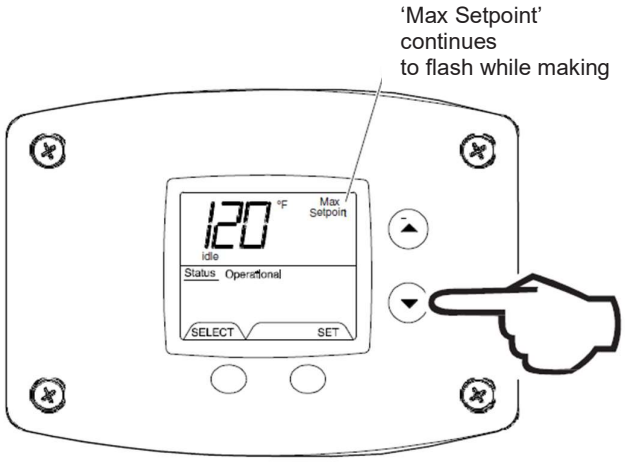

Fig 48

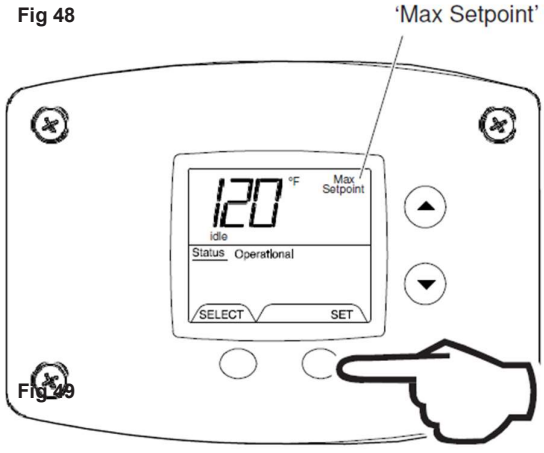

Fig 49

6.18.2 To change the Maximum Setpoint Limit (Max Setpoint) for the temperature setpoint

Warning
Setting the water temperature to the maximum set point can result in scalding hot water delivered to the taps. It is highly recommended that the maximum setpoint be adjusted to the lowest temperature possible for the needs of the installation. See following section to change the maximum setpoint limit (max setpoint). Make sure the water heater control display is not in a public area that can result in the temperature settings being improperly adjusted.
See previous warning on scalds and an ASSE approved mixing valve.

1. In service mode press the 'Select' button until 'Max Setpoint' is displayed (Fig. 46).

2. Press 'Set' button to enter setting mode. 'Max Setpoint' will flash to indicate setting mode (Fig. 47).

3. Press 'UP' or 'DOWN' buttons to change the maximum setpoint value. This will limit the maximum setpoint the user can select. Note: The maximum setpoint is approximately 180°F (Fig. 48).

4. Press 'Set' button to confirm new 'Max Setpoint' value and stop setting mode (Fig. 49).

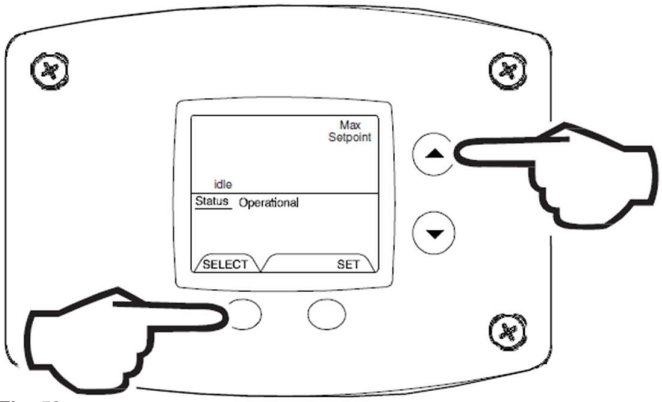

Fig. 50

5. 30 Seconds after the last button press, the Water Heater Display will go back to ‘User Mode’. It will read ‘Max Setpoint’ without showing a temperature value if the temperature setpoint is at the maximum setting.

   The Water Heater Display can be set back to the ‘User Mode’ immediately by pressing both the ‘Temperature Up’ and ‘Select’ buttons together for 3 seconds (Fig. 50).

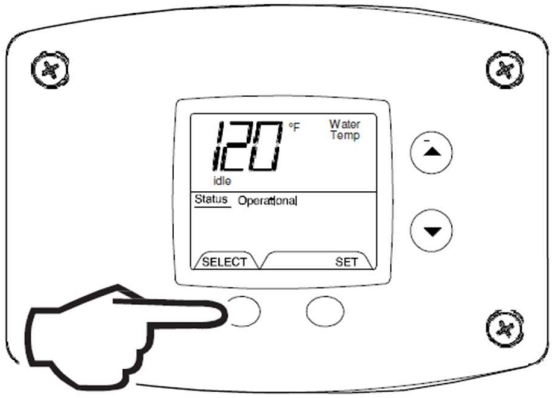

Fig. 51

6.18.3 Display of water temperature

1. In Service Mode, Press the ‘Select’ button until ‘WaterTemp’ is displayed in the upper right section of the water heater display. For water heaters using two temperature sensors in the tank, this will be the average reading between the two sensors. For water heaters using a single sensor, this is the reading for the sensor (Fig. 51).

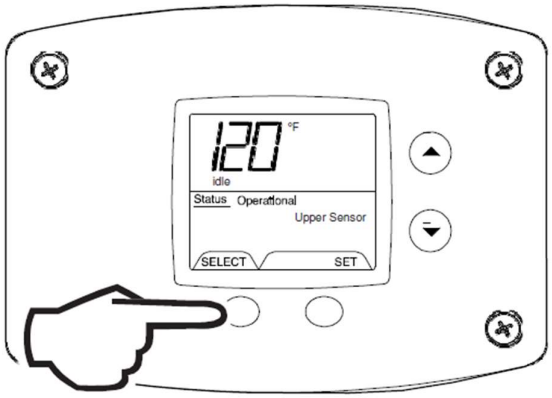

Fig. 52

2. For water heaters using two temperature sensors, pressing the ‘Select’ button again displays the Upper Sensor temperature reading. ‘Upper Sensor’ will be displayed in the lower right side of the status window of the water heater display (Fig. 52).

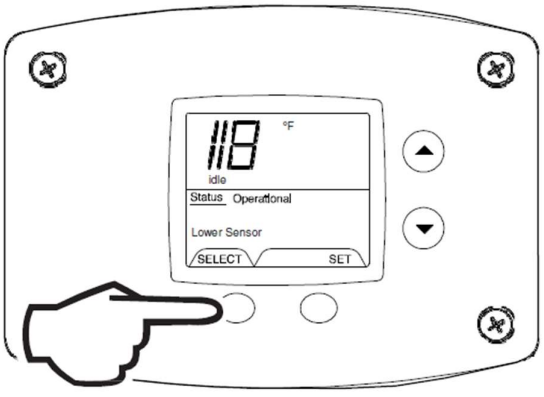

Fig. 53

3. For water heaters using two temperature sensors, pressing the ‘Select’ button again displays the Lower Sensor temperature reading. ‘Lower Sensor’ will be displayed in the lower left side of the status window of the water heater display (Fig. 53).

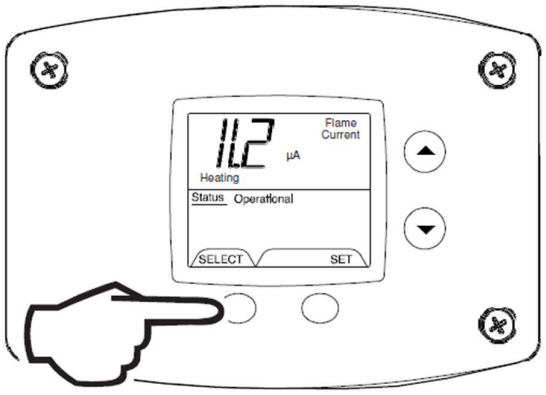

Fig. 54

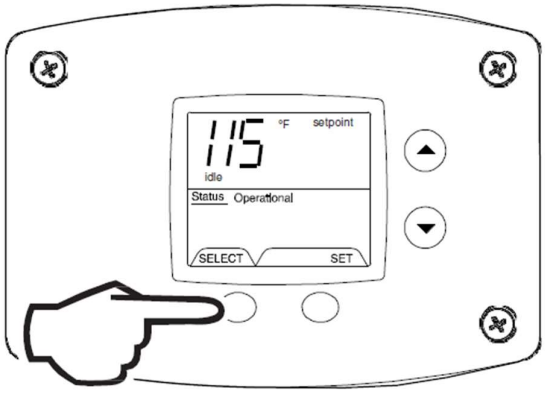

Fig. 55

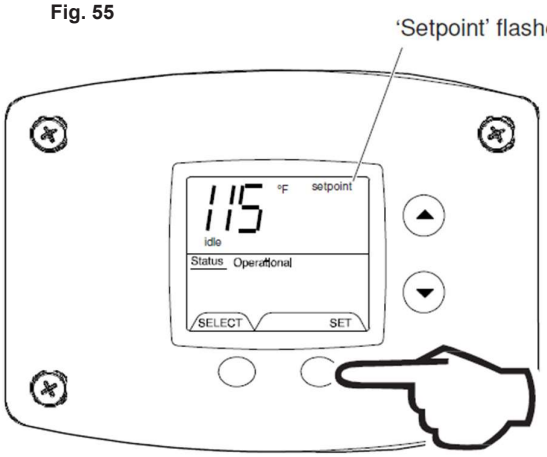

Fig. 56

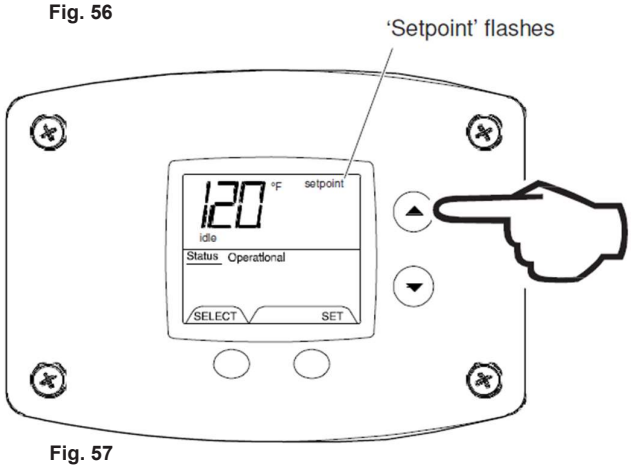

Fig. 57

6.18.4 To display flame sense current of the pilot flame sensor

The pilot flame sense current is available only when the burners are in operation.

1. Make sure the status displays 'Heating' or draw enough hot water to start the burners.
2. Enter the 'Service Mode' described previously.
3. Press the 'Select' button until a number value is displayed with 'Flame Current' to the right of the number. The value displayed is in microamps (µA). (Fig. 54)

6.18.5 To display and change temperature setpoint

1. In 'Service Mode' press the 'Select' button until 'Setpoint' is shown in the water heater display (Fig. 55).
2. Press the 'Set' button to enter the setting mode. 'Setpoint' will flash in the water heater display (Fig. 56).
3. To raise the temperature setpoint, press the 'Temperature Up' button until the desired temperature is shown on the water heater display (Fig. 57).

Note

The maximum temperature that can be set in the Water Heater Display is limited to the 'Max Setpoint' described previously. To change the 'Max Setpoint', refer to the procedure 'To Change the Maximum Setpoint Limit…' described previously under 'Accessing the Service Mode on the Water Heater Display'.

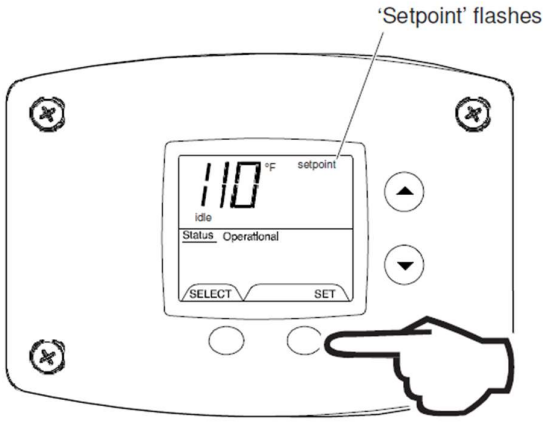

Fig. 58

4. To lower the temperature setpoint, press the 'Temperature Down' button until the desired temperature is shown on the water heater display (Fig. 58).

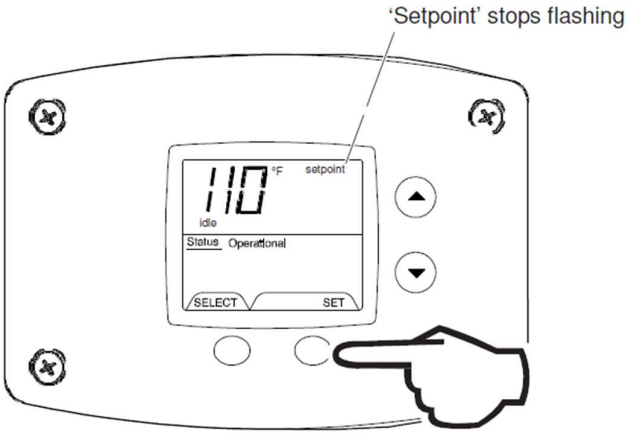

Fig. 59

5. When the desired setpoint is reached on the water heater display, press the 'Set' button to confirm the new setpoint. 'Setpoint' stops flashing in the water heater display (Fig. 59).

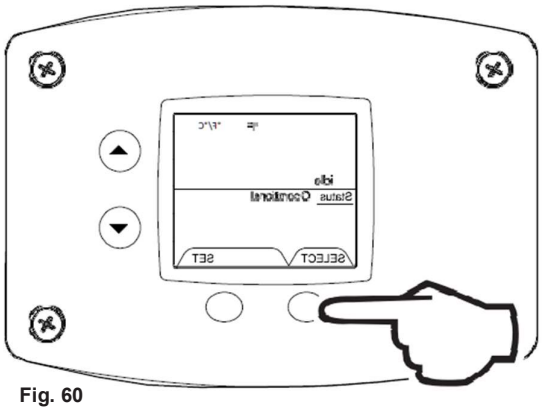

Fig. 60

6.18.6 To display and change temperature format (°F/°C)

1. While in 'Service Mode', press 'Select' button until ''°F/°C' is shown in the upper right portion of the water heater display (Fig. 60).

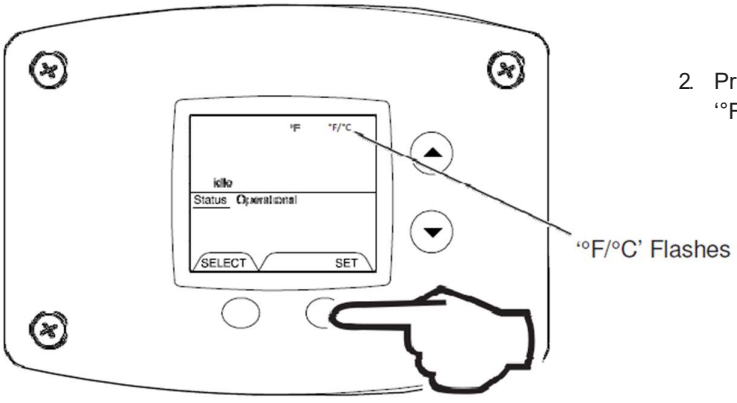

Fig. 61

2. Press 'Set' button to change temperature format. ''°F/°C' symbol will flash in the water heater display (Fig. 61).

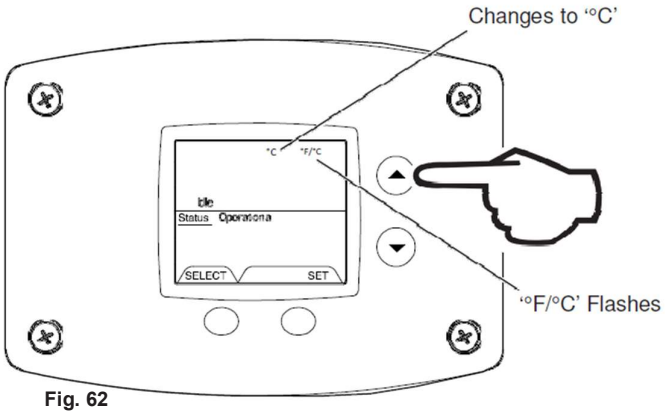

Fig. 62

3a. Press 'Temperature Up' button to change temperature format to °C (Fig. 62).

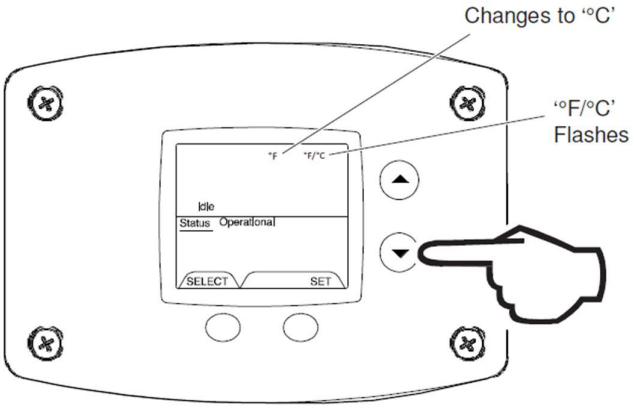

Fig. 63

3b. Press 'Temperature Down' button to change temperature format to °F (Fig. 63).

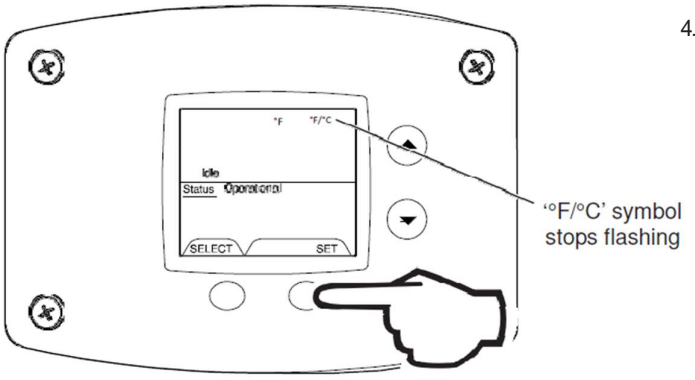

Fig. 64

4. Press 'Set' button to confirm °F or °C format. °F/°C will stop flashing (Fig. 64).

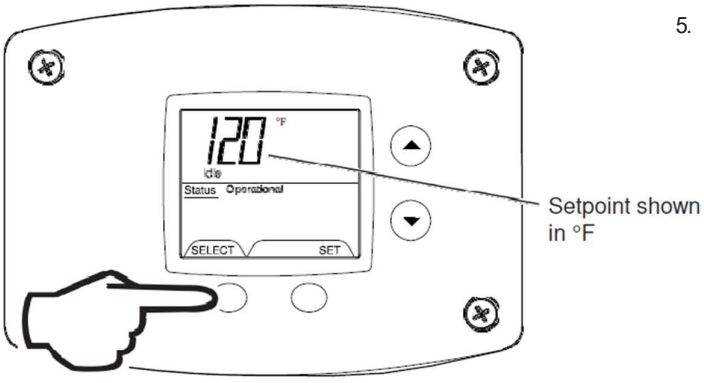

Fig. 65

5. Pressing 'Select' button will return display to setpoint in format selected (°F or °C) immediately (Fig. 65).

6.19 How to reset the control from Lockout conditions

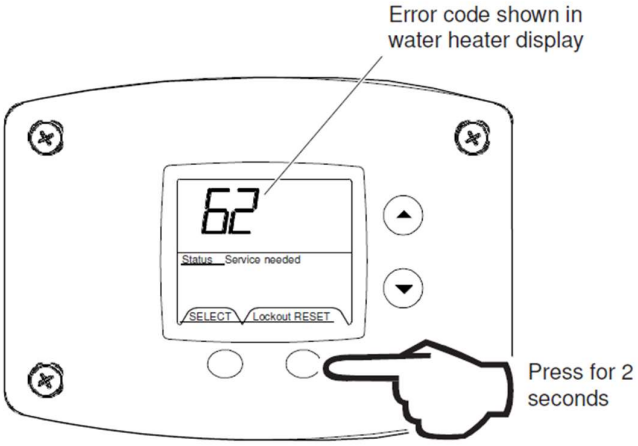

Fig. 66

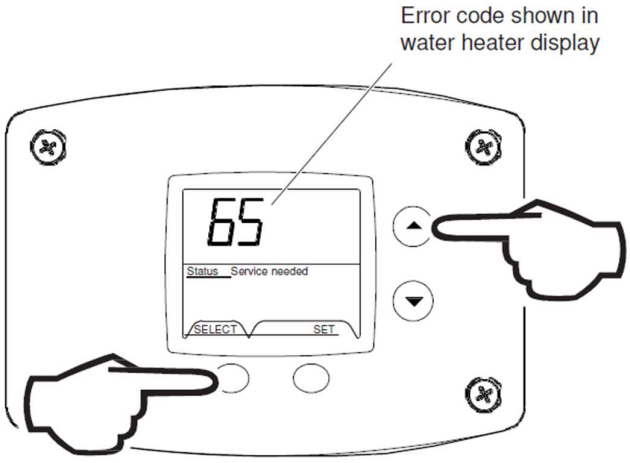

Fig. 67

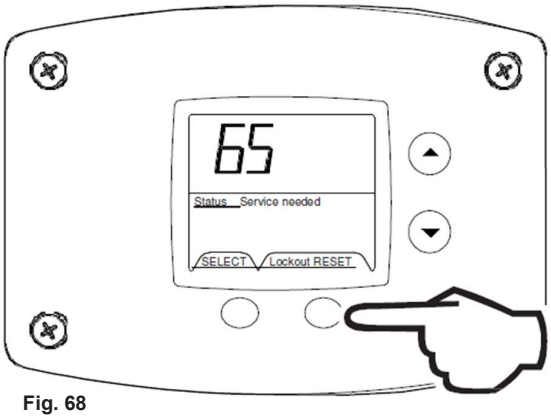

Fig. 68

Warning
The following procedure is for service and installation personnel only. Resetting lockout conditions without correcting the malfunction can result in a hazardous condition.

If an error code is displayed (except for #4, low flame sense current), the water heater will be in a 'lockout condition' with the water heater display showing the error code number and 'Service Needed' in the status section of the display window.

6.19.1 Resetting error codes in soft lockout condition

Error codes 62 (maximum number of retries detected) and 63 (maximum number if ignition recycles detected) are 'Soft Lockouts' in which the control can be reset in the 'User Mode' by pressing the lower right button under 'Lockout Reset' shown in the lower right portion of the display (Fig. 66). The control will also go through 3 attempts to relight the burners every hour in the soft lockout condition.

6.19.2 Resetting error codes in hard lockout condition

All other error codes will put the water heater into a 'Hard Lockout' condition, in which the water heater will not operate and cannot be reset in the 'User Mode'. To reset a hard lockout, first enter the "Service Mode" described earlier by pressing both the 'Temperature Up' and 'Select Buttons' at the same time for 3 seconds. Then press the lower right button under 'Lockout Reset' in the water heater display and hold for 3 seconds.

1. Press for 3 seconds to enter service mode (Fig. 67).

2. Press for 3 seconds to reset control in service mode (Fig. 68).

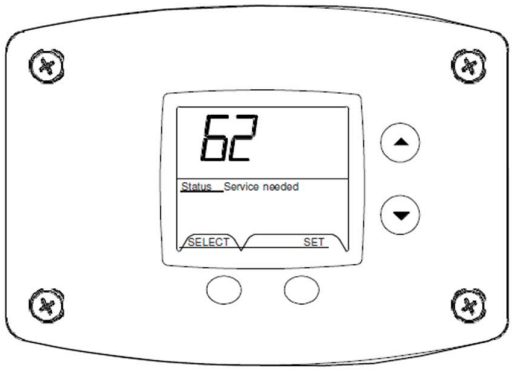

Fig. 69

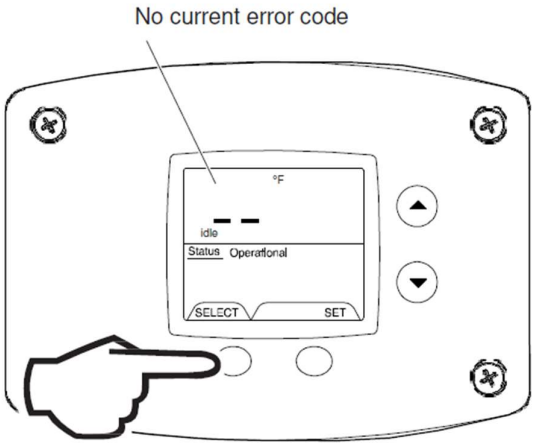

Fig. 70

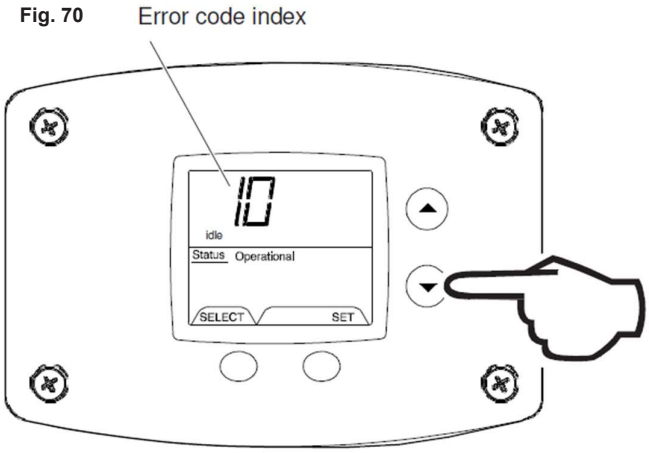

Fig. 71

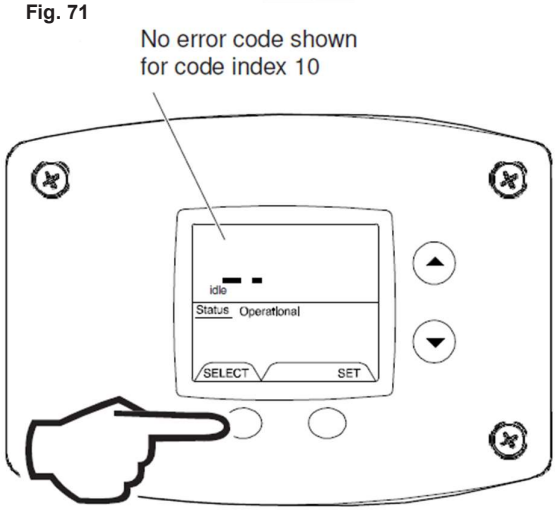

Fig. 72

6.19.3 Error codes and error history display

If there is an operating problem with the water heater, an error code number will appear on the water heater display with 'Service Needed' to the right of the 'Status' indicator. The error code label is located below the water heater display and the following section in this Installation and Operating Instruction Manual explains the error codes with corrective actions to repair the water heater. Example of Error Code in the Display (Fig. 69).

6.19.4 Error code history

In 'Service Mode' pressing the 'Select' button after the 'Software Version' (item 8 in the previously described sequence of service modes) will show an error code history, if there have been any previous operating problems with the water heater. If the display shows --, there is not a current error code.
The Water Heater Display will provide up to 10 previous error codes. The oldest error code will be stored in code index #1 and the most recent in code index #10 (if there are 10 error codes).

6.19.5 To view previous error codes

1. In 'Service Mode' press the 'Select' button until the next display after the 'Software Version'. If there are no current error codes, the display will show -- (Fig. 70).

2. Press the "Temperature Down" button to select the error code index, starting with the most recent error code '10' (Fig. 71).

3. Press the "Select" button to view the error code for 'code 10'. If there is a number displayed, note what the number is. The label next to the water heater display will identify the code number. If no number is displayed with only a '--' in the water heater display, then there has not been an error code for error code index 10 (Fig. 72).

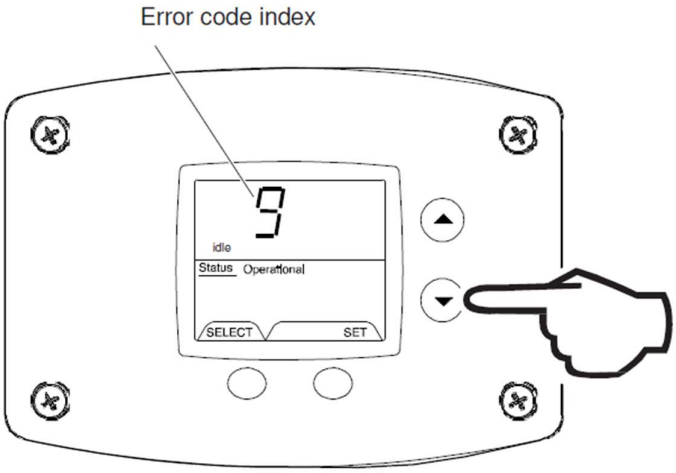

Fig. 73

4. Press the ‘Temperature Down’ button to change to the previous code index, code #9 (Fig. 73).

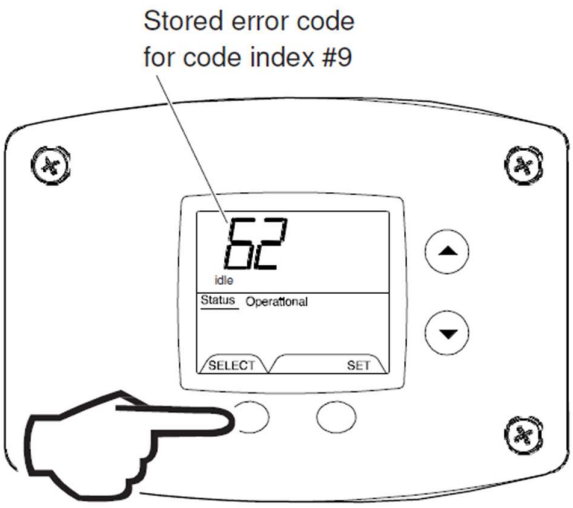

Fig. 74

5. Press the ‘Select’ button for code index #9 to view if there are any code numbers (Fig. 74).

6. Continue pressing the ‘Temperature Down’ button to change to the next error code index and press ‘Select’ to view the error code number, if any, for that index number. Continue on to index #1, the oldest error code index. The water heater display will store up to 10 error codes with the oldest code starting in code index #1 with the most recent code in code index #10.

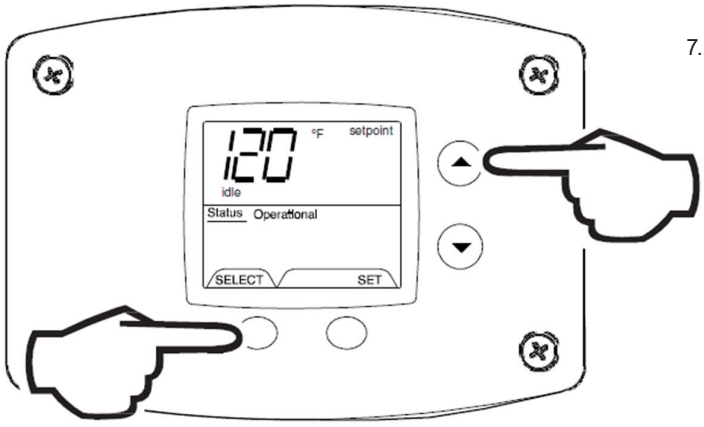

Fig. 75

7. 10 seconds after the last button press, the Water Heater Display will revert back to the current error code display. To exit Service Mode, either wait 30 seconds or press Temperature Up button and Select Button for 3 seconds (Fig. 75).

6.20 Diagnostic error codes and troubleshooting procedures for Resideo integrated controls (24 volt flue damper model series)

Error Code	Definition of Code	Cause of Problem and Actions Taken to Correct
4	Low flame sense	• Determine flame sense current in the Service Mode with the water heater operating. • If less than 1.0 microamps, check burner flame sense rod and wire. Clean flame sense rod with emery cloth. • If problem is not solved, replace pilot.
6	Flame sensed out of normal sequence (before opening gas valve or after closing gas valve)	• Check to make sure gas valve has closed. • No voltage should be present at the gas valve before or after ignition cycle. • Make sure wire positions on the wire harness are correct. • If gas valve is stuck open, replace.
23	Flame detected before ignition	• Check to make sure gas valve has closed. • No voltage should be present at the gas valve before the ignition cycle. • Make sure wire positions on the wire harness are correct. • If gas valve is stuck open, replace.
24	Flame detected after heating cycle completes	• Check to make sure gas valve has closed. • No voltage should be present at the gas valve before the ignition cycle. • Make sure wire positions on the wire harness are correct. • If gas valve is stuck open, replace.
31	Upper sensor reading faulty	• Resistance of upper sensor out of operating range. • Check continuity of wire harness to upper sensor, and if O.K., replace upper sensor.
32	Lower sensor readings faulty	• Resistance of lower sensor out of operating range. • Check continuity of wire harness to lower sensor, and if O.K., replace lower sensor.
55	Damper end switch failed to close (stuck open)	• Check to see if flue damper has fully opened. If not, disconnect damper harness at damper plug connection and check for 24 volts between pins on red and white wires. • If no voltage, check wire harness or measure output on control board (pins 1&4). • If there is no voltage at the control board, replace control. • Replace wire harness if voltage does not pass to the pin terminals from the control. • If there is 24 volts at flue damper connection, replace flue damper. • If damper is open, disconnect harness and check continuity between pins from black and yellow wires on flue damper. If no continuity, replace flue damper.
56	Damper end switch failed to open (stuck closed)	• Check to see if flue damper has fully closed. If not, disconnect damper harness at damper plug connection and check for 24 volts between pins on red and white wires. • If no voltage, check wire harness or measure output on control board (pins 1&4). • If there is no voltage at the control board, replace control. • Replace wire harness if voltage does not pass to the pin terminals from the control. • If there is 24 volts at flue damper connection, replace flue damper. • If damper is closed, disconnect harness and check continuity between pins from black and yellow wires on flue damper. If there is continuity, the end switch is stuck open. Replace flue damper.
57	Flame rod shorted to ground	• Pilot flame sensor rod is shorted to ground. • Check to see if flame sensor wire has bare spots touching metal parts of if flame sensor rod is touching the burner or other metal parts. • Replace if flame sense wire is damaged or flame rod is bent.

58	AC line frequency error – signal too noisy or frequency incorrect	• Check line voltage frequency to the water heater. • Determine if there are wide fluctuations. • Call an electrician if the problem persists. • The water heater should be on a separate line.
59	Line voltage too low or high	• Check line voltage to the water heater. • Determine cause of low or high voltage. • Call an electrician or your utility. • The water heater should be on a separate line.
61	DC output voltage unstable	• Check line voltage to the water heater for erratic readings. • Also check wiring to make sure there are no shorts. • If power supply and wiring are O.K., replace control board.
62	Maximum number of retries detected	• Pilot is either not lighting or not staying lit during the ignition cycle. • Check inlet gas pressure for minimum pressure on rating label. • Is pilot electrode sparking? • Check gas valve wire harness for broken wires or shorts. If 24 volts is present between PV and PV/MV terminals at the gas valve, replace gas valve. • Check for voltage output to the yellow and red gas valve wires on the control board pins. • If during the ignition trial period, there is no voltage present at the control board pin terminal for the red and yellow wires leading to the gas valve, then replace the control board. • Replace pilot if wires are damaged or electrode is damaged.
63	Maximum number of ignition recycles detected	• Pilot flame is lost during run cycle, then reestablished on ignition cycle. • Check inlet gas pressure. Is gas pressure dropping below the minimum operating pressure on the rating label after the main gas valve opens? Is the gas pipe size to the water heater adequate? • Check the pilot shield position and condition of the burners. Clean or replace as needed. • Check the pilot flame and observe the microamp output on the run cycle. • Check the pilot tubing to the pilot and replace if crimped or damaged. • Replace pilot if wires, flame sensor, or electrode is damaged.
64	Electronics failure	• Replace control board.
65	High water temperature (over 200°F *(93°C)*)	• Water temperature in tank has exceeded 200°F *(93°C)*. • Check tank sensor. • Make sure sensor is fully inserted into the well (clip on sensor wire secures sensor in place). • Check sensor reading. If not within specifications, replace sensor. • If sensor and wire harnesses check O.K., replace control board.

6.21 Procedure for checking thermostat sensors

Set the thermostat above water temperature (See temperature adjustment section) and observe system through one (1) complete cycle. Make sure system operates as desired.

To check the upper sensor or lower sensor assembly, compare the resistance of the sensor terminals (blue leads for upper sensor, yellow and black lead for lower sensor) as measured by an ohmmeter to the water temperature as measured by an accurate thermometer. Thermistor resistance increases as the temperature decreases. The tables below show the correct sensor resistance at various temperatures. Replace the sensor if the ohm reading in the chart does not approximate the reading from the sensor at the temperature measured in the tank.

In Degrees F										
°F	0	1	2	3	4	5	6	7	8	9
40	26109	25400	24712	24045	23399	22771	22163	21573	21000	20445
50	19906	19383	18876	18383	17905	17440	16990	16553	16128	15715
60	15314	14925	14548	14180	13823	13477	13140	12812	12494	12185
70	11884	11592	11308	11032	10763	10502	10248	10000	9760	9526
80	9299	9078	8862	8653	8449	8250	8057	7869	7685	7507
90	7333	7165	7000	6839	6683	6531	6383	6238	6098	5961
100	5827	5697	5570	5446	5326	5208	5094	4982	4873	4767
110	4663	4562	4464	4368	4274	4183	4094	4006	3922	3839
120	3758	3679	3602	3527	3453	3382	3312	3244	3177	3112
130	3048	2986	2925	2866	2808	2752	3697	3643	2590	2538
140	2488	2439	2391	2344	2298	2253	2209	2166	2124	2083
150	2043	2004	1966	1928	1891	1856	1820	1786	1753	1720
160	1688	1656	1625	1595	1566	1567	1509	1481	1454	1427
170	1402	1376	1351	1327	1303	1280	1257	1235	1213	1191
180	1170	1150	1129	1110	1090	1071	1053	1035	1017	999
190	982	965	949	933	917	901	886	871	857	842
200	828	814	801	788	775	762	749	737	725	713

In Degrees C										
°C	0	1	2	3	4	5	6	7	8	9
0	32648	31026	29495	28049	26682	25389	24166	23010	21915	20879
10	19898	18968	18088	17253	16461	15710	14998	14322	13680	13071
20	12492	11942	11419	10922	10450	10000	9572	9165	8778	8409
30	8057	7722	7403	7099	6808	8532	6268	6016	5775	5546
40	5327	5117	4917	4726	4543	4368	4201	4042	3889	3742
50	3602	3468	3340	3217	3099	2986	2878	2774	2675	2579
60	2488	2400	2316	2235	2157	2083	2011	1942	1876	1813
70	1752	1693	1637	1582	1530	1480	1432	1385	1340	1297
80	1256	1216	1177	1140	1105	1070	1037	1005	974	944
90	916	888	861	835	810	786	763	741	719	698

7 Fault finding

7.1 Main power light is not on

Make sure that the water heater is plugged in.

When the switch is on, is there 230V between L1 and N on the terminal block? If not, check for loose wire connections on the ‘Power Switch Wire Harness.’ If connections are ok, replace the switch.

If there is voltage between L1 and N, the light on the switch is burnt out. Replace switch.

7.2 Thermostat does not call for heat

Make sure that the temperature of the tank is cool.

If the thermostat does not call for heat, check the PRIMARY voltage across the ‘Transformer’. If there is voltage across the PRIMARY, check the voltage across the SECONDARY leads of the ‘Transformer’.

Install a jumper wire from N.O. terminal to the COM terminal on the ‘Thermostat PC Board’. If the thermostat calls for heat after installing a jumper wire, replace the ‘Thermostat Sensor Probe’.

If the ‘Sensor Probe’ is replaced and the unit still does not operate, check ‘Potentiometer’ for the proper resistance. If the readings are correct, replace the ‘Thermostat PC Board’. Otherwise, replace the ‘Potentiometer’.

7.3 Ignition module ‘Power’ LED is not lit

Check for 230 VAC at the ignition module on ‘230 VAC IN.’ If there is voltage, check the secondary (24 volt terminals) voltage across the transformer as previously described. If there is no voltage from the secondary plug from the transformer, replace the transform or wire harness. If the control has 230 and 24 volt input, replace the control.

7.4 Fan does not energise

Check for voltage to the fan leads. If 230 volts is present, replace the fan. If no voltage is present, check the fan relay, thermostat/high limit switch and collector unit switch. If the limit switch trips, call our technical support department.

7.5 Ignitor does not glow

Is there voltage to the ‘Hot Surface Ignitor’? Check for 230VAC to the ignitor from the ignition module when the ignition LED is lit. If not voltage to the ignitor, replace ignition control or the ignitor relay.

Check the resistance value across the ‘Hot Surface Ignitor’. If over 2000 ohms, then replace hot surface ignitor.

7.6 Main valve does not turn on

Put your hand on the gas valve – can you feel it energize? If not, check the voltages at the ignition module across pins MV on the plug GND.

If there is a 24 VAC problem, check to see if the ‘Rectifier Harness’ is secure. If it is secure, replace the ‘Gas Valve’.
If you can feel the gas valve energize, check the main gas supply is not in the off position.

7.7 Burner flame keeps going out

Is there minimum gas supplied to water heater as stated on the rating plate? If not, increase the supply pressure to the water heater.

Measure the mircoAmps through the flame sensor using a multimeter. Is there at least 4 microAmps? If not, replace the ‘Flame Sensor’ or flame sensor wire.

7.8 Thermostat does not satisfy

Is the tank temperature above the temperature set point?

Does the T&P relief valve leak? If yes, replace ‘Thermostat PC Board’.

7.9 Fan did not post purge

Check ‘Pressure Switch’ (exhaust pressure switch) as previously mentioned.

Check ‘Collector Limit Switch’ as previously mentioned.

If the above switches are functioning, please contact the Technical Support Department at Andrews Water Heaters for further assistance.

8 Parts lists and illustrations (Series C, D & E)

8.1 EC230/960, EC230/600, EC230/700, EC380/740, EC380/980, EC380/1220 & EC380/1400 General assembly

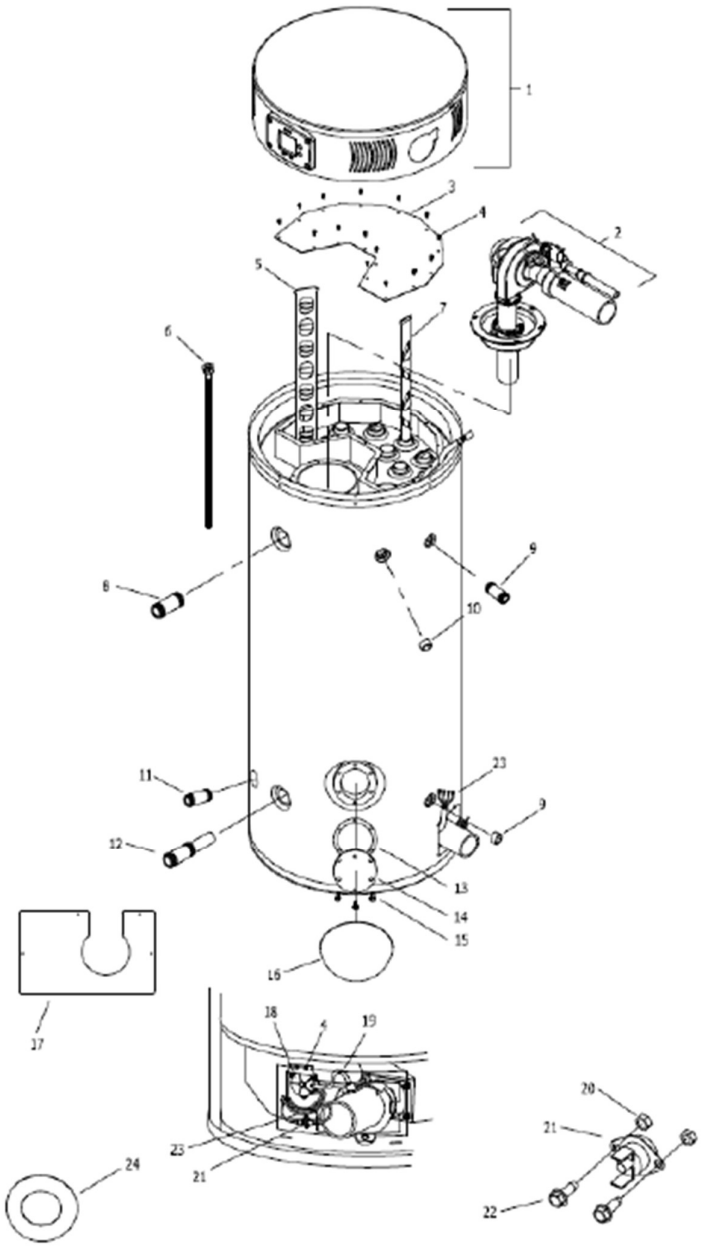

Fig. 76

General Assembly

Item No	Date and Series	Part No	Description	QTY
1	**C, D & E**		**See Combustion Surround Assy**	
2	**C, D & E**		**See Combustion System Assy**	
3	**C, D & E**	Z276	Collector Cover Second Pass	1
4	**C, D & E**	Z277	Screw-Second Pass Collector Cover	15
5	**C D & E**	E881	Baffle 4"	2
6	**C**	Z590	Anode Rod (Magnesium)	4
6	**C**	Z278	Anode Rod (Magnesium)	4
6A	**C, D & E**	Z091	Anode Rod (Titanium)	2
7	**C, D & E**	E879	Baffle 2"	8
7	**C, D & E**	E880	Baffle 2"	8
8	**C, D & E**	E875	Hot Outlet Nipple (front connect)	1
9	**C, D & E**	7721570	Nipple ¾” NPT Brass EC230	1
9	**C, D & E**	7721602	Nipple 1" NPT Brass EC380	1
10	**C, D & E**	Z596	Pipe Plug	1
11	**C, D & E**	C247AWH	Nipple 3/4" NPT	1
12	**C, D & E**	E876	Inlet Tube Hydrojet (Front connect)	1
13	**C, D & E**	Z190	Clean-out Gasket	1
14	**C, D & E**	C300AWH	Clean-out Cover	1
15	**C, D & E**	E483	Screws 5/16 - 18 x 3/4	6
16	**C, D & E**	C301AWH	Clean-out Access Cover	1
17	**C, D & E**	E899	Outer Door EF Series	1
18	**C, D & E**	E909	Exhaust Pressure Switch	1
19	**C, D & E**	Z280	Silicone Tuding 3/16" ID	1
20	**C, D & E**	Z281	Keep Nut	4
21	**C, D & E**	E878	Re-Settlable Limit Switch	1
22	**C, D & E**	Z282	Screw 6-32 x 3/8"	4
23	**C, D & E**	Z607	Hi-Limit & P.S Harness EC230	1
23	**C, D & E**	Z608	Hi-Limit & P.S Harness EC380	1
24	**C, D & E**	Z283	Exhaust Escutcheon	1

8.2 EC230/960, EC230/600, EC230/700, LEC230/700, EC380/740, EC380/980, EC380/1220 & EC380/1400 Combustion system assembly

Fig. 77

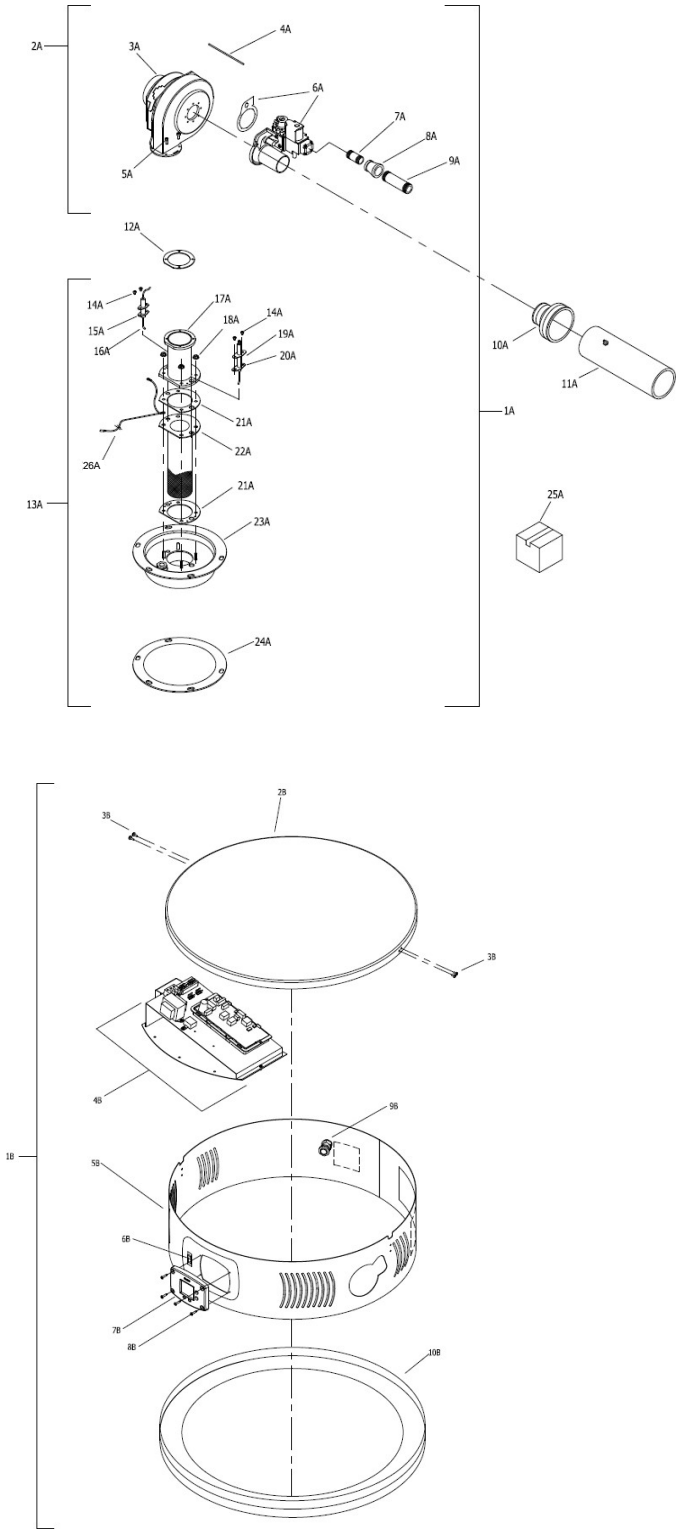

Combustion System Assembly

Item Number	Series / Date	Part Number	Description	Qty
1A	**E**	7697535	Combustion System Assy EC230-600 Nat Gas	1
1A	**C & D**	Z578	Combustion System Assy EC230-600 Nat Gas	1
1A	**E**	7697536	Combustion System Assy EC230-700 Nat Gas	1
1A	**C & D**	Z580	Combustion System Assy EC230-700 & EC380-740 Nat Gas	1
1A	**E**	7697537	Combustion System Assy EC230-960 Nat Gas	1
1A	**C & D**	Z576	Combustion System Assy EC230-960 & EC380-980 Nat Gas	1
1A	**E**	7697538	Combustion System Assy EC380-740 Nat Gas	1
1A	**E**	7697539	Combustion System Assy EC380-980 Nat Gas	1
1A	**E**	7697540	Combustion System Assy EC380-1220 Nat Gas	1
1A	**C & D**	Z582	Combustion System Assy EC380-1220 Nat Gas	1
1A	**E**	7697541	Combustion System Assy EC380-1400 Nat Gas	1
1A	**C & D**	Z584	Combustion System Assy EC380-1400 Nat Gas	1
2A	**E**	7697564	Blower/Gas Valve assy Nat Gas EC230-600 Nat Gas	1
2A	**C & D**	Z620	Blower/Gas Valve assy Nat Gas EC230-600 Nat Gas	1
2A	**E**	7697565	Blower/Gas Valve assy Nat Gas EC230-700 Nat Gas	1
2A	**C & D**	Z622	Blower/Gas Valve assy Nat Gas EC230-700 & EC380-740 Nat Gas	1
2A	**E**	7697566	Blower/Gas Valve assy Nat Gas EC230-960 Nat Gas	1
2A	**C & D**	Z630	Blower/Gas Valve assy Nat Gas EC230-960 & EC380-960 Nat Gas	1
2A	**E**	7697567	Blower/Gas Valve assy Nat Gas EC380-740 Nat Gas	1
2A	**E**	7697568	Blower/Gas Valve assy Nat Gas EC380-980 Nat Gas	1
2A	**E**	7697569	Blower/Gas Valve assy Nat Gas EC380-1220 Nat Gas	1
2A	**C & D**	Z624	Blower/Gas Valve assy Nat Gas EC380-1220 Nat Gas	1
2A	**E**	7697570	Blower/Gas Valve assy Nat Gas EC380-1400 Nat Gas	1
2A	**C & D**	Z626	Blower/Gas Valve assy Nat Gas EC380-1400 Nat Gas	1
3A	**E**	E892	Blower-EBM (only) EC230-600, 230-700, 380-740	1
3A	**C & D**	E892	Blower-EBM (only) EC230-600, 230-700, 380-740	1
3A	**D&E**	7697571	Blower-Fasco (only) EC230-600, 230-700, 380-740	1
3A	**C & D**	E893	Blower-EBM (only) EC230-960, 380-980, 380-1220	1
3A	**E**	E893	Blower-EBM (only) EC230-960	1
3A	**D&E**	7697572	Blower-Fasco (only) EC230-960, 380-980	1
3A	**E**	Z634	Blower-EBM (only)EC380-1400	1
3A	**C & D**	Z634	Blower-EBM (only)EC380-1400	1

3A	**C & D**	7697573	Blower-EBM (only)EC380-1220	1
3A	**E**	7697574	Blower-Fasco (only) EC380-1400	1
3A	**C & D**	7697575	Blower-EBM (only) EC380-1400	1
A4	**C, D & E**	Z280	Hose Tubing 3/16" ID	1
A5	**C, D & E**	Z291	Screw 10-32 x 3/4" SHCS	1
6A	**E**	7697576	Gas Valve Assy Nat Gas EC230-600	1
6A	**C & D**	E894	Gas Valve Assy Nat Gas EC230-600 Nat Gas	1
6A	**E**	7697577	Gas Valve Assy Nat Gas EC230-700	1
6A	**C & D**	E895	Gas Valve Assy Nat Gas EC230-700, 230-980, 380-740 Nat Gas	1
6A	**E**	7697578	Gas Valve Assy Nat Gas EC230-960	1
6A	**E**	7697579	Gas Valve Assy Nat Gas EC380-740	1
6A	**E**	7697580	Gas Valve Assy Nat Gas EC380-980	1
6A	**E**	7697581	Gas Valve Assy Nat Gas EC380-1220	1
6A	**E**	7697582	Gas Valve Assy Nat Gas EC380-1400	1
6A	**C & D**	E896	Gas Valve Assy Nat Gas EC380-1220 Nat Gas	1
6A	**C**	E897	Gas Valve Assy Nat Gas EC380-1400 Nat Gas	1
7A	**C, D & E**	Z645	Nipple	1
8A	**C, D & E**	Z646	Reducer	1
9A	**C, D & E**	Z647	Nipple	1
10A	**C, D & E**	Z648	Flex Reducer	1
11A	**C, D & E**	Z649	Inlet Pipe (PVC)	1
12A	**C, D & E**	Z082	Gasket Blower Transition	1
13A	**C, D & E**	7697583	Burner Assy (46023)	1
13A	**C, D & E**	7697584	Burner Assy (380/980, 380/1220 & 380/1400)	1
14A	**C, D & E**	Z299	Screw 8-32 x 1/4 RHCR	4
15A	**C, D & E**	E891	Flame Sensor Gasket	1
16A	**C, D & E**	E890	Flame Sensor c/w Gasket	1
NS		Z689	Flame Sensor Lead (Black Top)	1
17A	**C, D & E**	Z300	Weldment Blower Transition	1
18A	**C, D & E**	Z301	Nut Hex Washer	4
19A	**C, D & E**	7697585	Spark Rod	1
NS		Z690	Spark Rod Lead	1
20A	**C, D & E**	Z302	Spark Rod Gasket	1

21A	**C, D & E**	E882	Burner Mounting Gasket	1
22A	**C, D & E**	7697586	Burner Tube Kit (EC230/600, EC230/700, EC230/960 & EC380/740)	1
22A	**C, D & E**	7768882	Burner Tube Kit (ECO380/1220, EC380/1400 & EC 380/980)	1
23A	**C, D & E**	Z303	Burner Mounting Insert	1
24A	**C, D & E**	G168	Gasket-Burner Mounting Insert	1
25A	**C, D & E**	7697587	Gas Regulator Kit Nat Gas (optional)	1
26A	**D**	7697595	Ground Wire	1

Item No	Date and Series	Part No	Description	QTY
1B	**C, D & E**	Z575	Combustion Surround Assy	1
2B	**C, D & E**	Z609	Surround Head	1
3B	**C, D & E**	Z610	Screw 8-18 x 1/4	4
4B	**C, D & E**	Z611	Ignition Control Assy	1
5B	**C, D & E**	Z612	Surround Ring	1
6B	**C, D & E**	Z143	Main Power Switch	1
7B	**C, D & E**	7697534	Control Display - Resideo Control	1
8B	**C, D & E**	Z266	Screw 8-18 x 3/4	4
9B	**C, D & E**	Z256	Water Tight Fitting	1
10B	**C, D & E**	Z617	Surround Base	1

8.3 EC230/960, EC230/600, EC230/700, EC380/740, EC380/980, EC380/1220, & EC380/1400 Combustion surround

Fig. 78

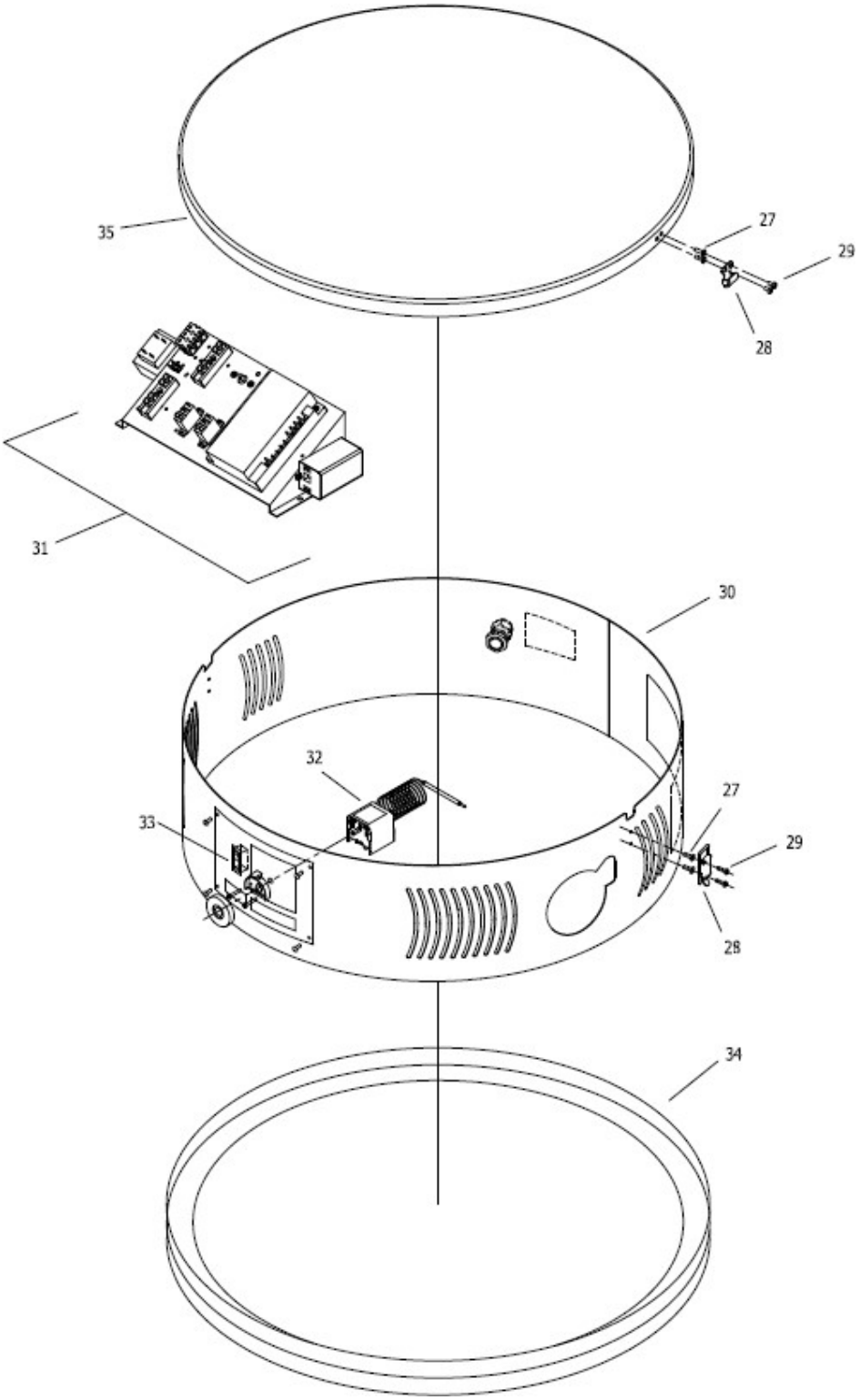

Combustion Surround

Item No	Part No	Description	QTY
1B	Z575	Combustion Surround Assy	1
2B	Z609	Surround Head	1
3B	Z610	Screw 8-18 x 1/4	4
4B	Z611	Ignition Control Assy	1
5B	Z612	Surround Ring	1
6B	Z143	Main Power Switch	1
7B	7697534	Control Display - Resideo Control	1
8B	Z266	Screw 8-18 x 3/4	4
9B	Z256	Water Tight Fitting	1
10B	Z617	Surround Base	1

8.4 EC230/960, EC230/600, EC230/700, EC380/740, EC380/980, LEC380/980, EC380/1220 & EC380/1400 Ignition control assembly

Fig. 79

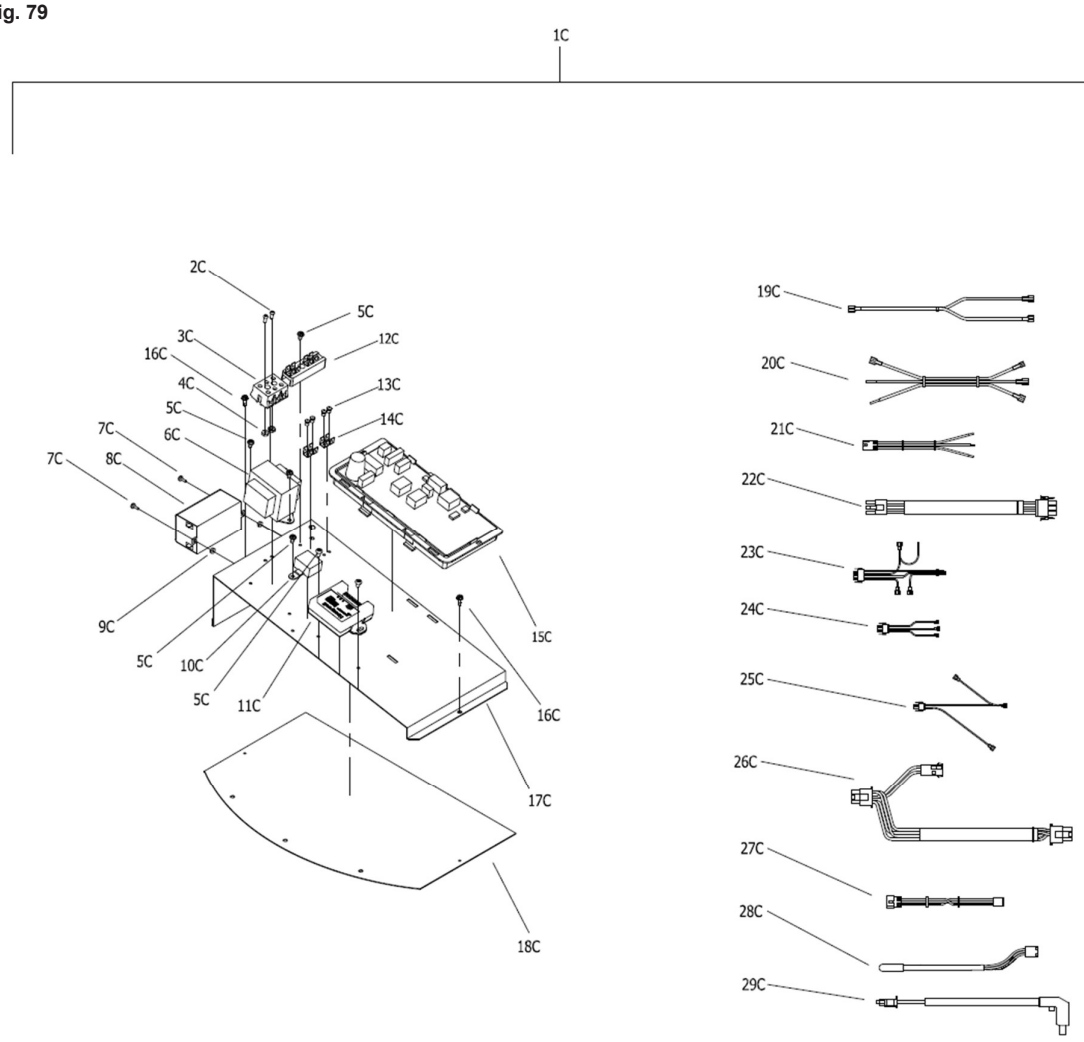

Ignition Control Assembly

Item No	Date and Series	Part No	Description	QTY
1C	**C, D & E**	Z611	Ignition Control Assy	1
2C	**C, D & E**	Z282	Screws 6-32 x 3/8"	2
3C	**C, D & E**	Z259	Terminal Block	1
4C	**C, D & E**	Z281	Nut-Keeps 6-32	1
5C	**C, D & E**	Z305	Screws 8-18 x 1/2"	2
6C	**C, D & E**	E888	Transformer	1
7C	**C, D & E**	Z311	Screws 4-40 x 3/8"	2
8C	**C, D & E**	E889	Power Anode	1
9C	**C, D & E**	Z310	Nut Keeps 4-40	2
10C	**C, D & E**	Z271	Noise Suppressor	1
11C	**C, D & E**	Z116	Alarm Module	1
12C	**C, D & E**	Z260	Terminal Strip	1
13C	**C, D & E**	Z308	Revet	4
14C	**C, D & E**	Z261	Terminal	2
15C	**C, D & E**	Z120	Control Module	1
16C	**C, D & E**	Z194	Screws 8-32 x 1/2"	2
17C	**C, D & E**	Z668	Control Mount Panel	1
18C	**C, D & E**	Z669	Control Mounting Bracket	1
19C	**C, D & E**	Z312	Power Anode Control Harness	1
20C	**C, D & E**	Z268	Powered Anode Control Harness	1
21C	**C, D & E**	Z254	Control Display Harness	1
22C	**C, D & E**	Z672	Blower Harness	1
23C	**C, D & E**	Z251	Power Switch Harness	1
24C	**C, D & E**	Z252	Primary Harness	1
25C	**C, D & E**	Z253	Secondary Harness	1
26C	**C, D & E**	Z676	Controller Harness	1
27C	**C, D & E**	Z255	Control Board Harness	1
28C	**C, D & E**	Z122	Lower T-State Sensor Harness	1
29C	**C, D & E**	Z679	Rectifier Harness	1
30C	**C, D & E**	Z270	Alarm Module Harness	1

8.5 Concentric flue component list (100/150mm dia.)

Fig. 80

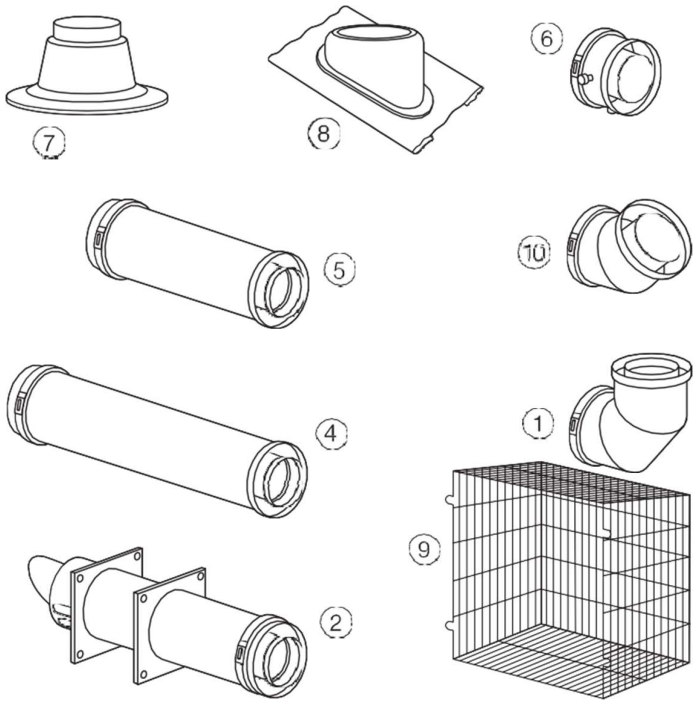

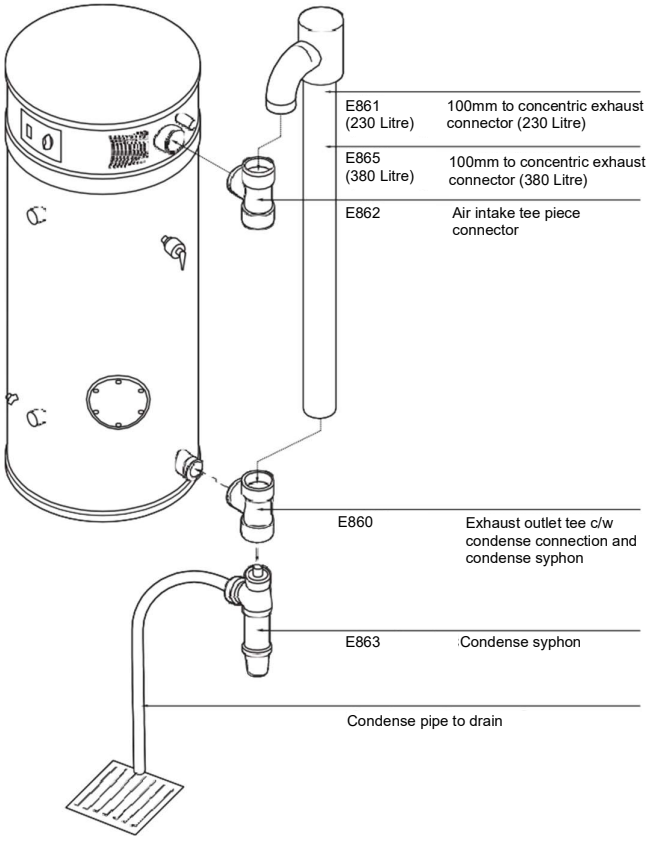

Concentric Flue Component

Part Ref.	Description	Part Number
1	90° Elbow with Clamp	5136162
2	Horizontal Flue Terminal	B342-B343
3	Wall Bracket (not shown)	5136163
4	1000mm Cuttable Flue with Clamp	5136159
5	500mm Flue with Clamp	5136160
6	Condensate Trap Tee c/w Syphon	5136164
7	Flat Roof Plate	E207
8	Angled Roof Plate	E208
9	Horizontal Flue Outlet Terminal Guard	E105
10	45° Elbow with Clamp	5136161
11	Locking Clamp (not shown)	5136165
12	Flue Seal 80mm Ø	5136155
13	Flue Seal 100mm Ø	5136166
14	Flue Seal 150mm Ø	7680414

8.6 Unvented system kit B290 - Parts list

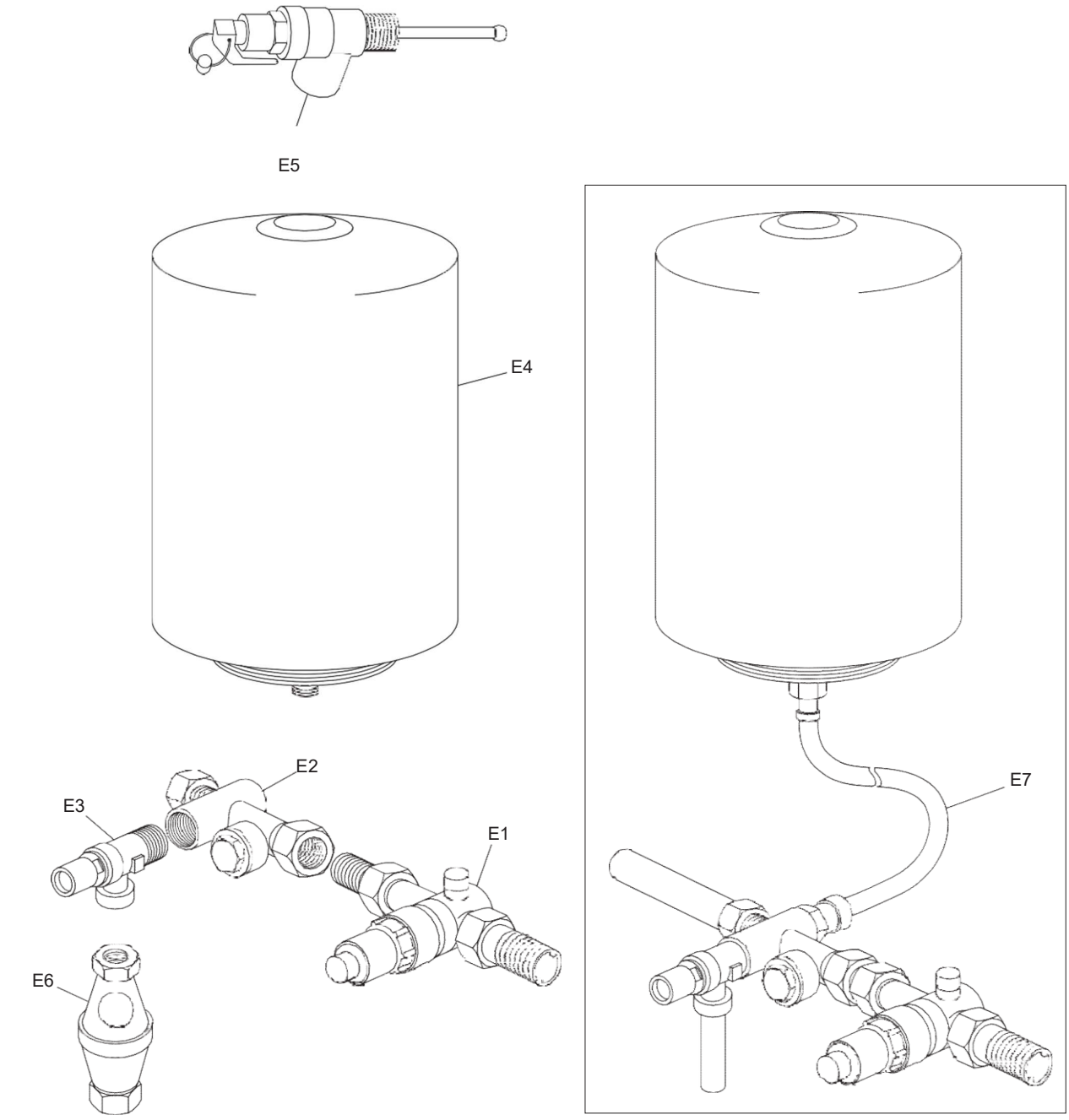

Fig. 81

Part Ref.	Description
E1	Combined Pressure Reducing Valve/Strainer
E2	Check Valve Assembly
E3	Expansion Valve
E4	Expansion Vessel (25 Litre)
E5	Temperature/Pressure Relief Valve
E6	Tundish from Expansion Valve and T/P Valve
E7	Hose Assembly

Spares list for ECOflo 230/600 to 960 & 380/740 to 1400

C Series Effective from Feb 2014 (Serial Nos LB) D Series Effective from Dec 2016 (Serial Nos PM) E Series Effective from Jan 2018 (Serial Nos SA)

ECOflo Serial Number Date Code Reference	
Year of Manufacture	**Month of Manufacture**
W = 2020	A = January
T = 2019	B = February
S = 2018	C = March
P = 2017	D = April
N = 2016	E = May
M = 2015	F = June
L = 2014	G = July
K = 2013	H = August
	J = September
	K = October
	L = November
	M = December

9 Appendix

9.1 Dismantling, disposal and recycling

Warning
Only qualified competent persons should remove and dismantle the appliance.

Before removing and dismantling please ensure you safely remove the power supply and isolated the appliance from the water and gas connections.

Dispose of the appliance correctly according to the laws and regulations in force. The appliance and accessories cannot be discarded along with normal household waste and should be recycled where appropriate.

More than 90% of the materials that make up the appliance are recyclable.

NOTES

© Copyright

All technical and technological information contained in these technical instructions, as well as any drawings and technical descriptions supplied, remain our property and shall not be multiplied without our prior consent in writing. Subject to alterations.

CE
0063

Register now to activate your warranty **www.andrewswaterheaters.co.uk/register-a-warranty.**
Please make sure you attach proof of purchase for your warranty to be monitored.

All descriptions and illustrations provided in this document have been carefully prepared but we reserve the right to make changes and improvements in our products which may affect the accuracy of the information contained in this leaflet. All goods are sold subject to our standard.
Conditions of Sale which are available on request.

July 2021

Customer support
Monday - Friday
8am - 5pm

Sales
0345 070 1055
Technical
03450701057
Website
andrewswaterheaters.co.uk
Twitter
@AndrewsWH

ANDREWS
WATER HEATERS

Andrews. Built to perform.