T/D 014

REMOTE TIME CONTROL SWITCHING KIT: B157

(CLOCK/SWITCH NOT SUPPLIED)

'E' SERIES PERMANENT PILOT STORAGE WATER HEATERS – Hi-flo

The introduction of this kit allows the water heater to be controlled by a remote clock/switch for night time or weekend shut down.

Wiring external to the water heater must be installed in accordance with the I.E.E. Regulations for the wiring of buildings and to any local regulations that may apply for the time switch kit.

This kit is designed to run off 220/240V 1 ph 50 Hz supply and a fuse rating of 3 Amp.

The method of connection to the mains electricity supply should facilitate complete electrical isolation of the appliance preferably by use of an unswitched shuttered socket outlet in conjunction with a fused three pin plug both complying with the requirements of BS 1363/A.

Alternatively a fused double pole switch or fused spur box serving only the heater may be used.

The point of connection to the mains should be readily accessible and adjacent to the appliance.

A. To install the kit

1. Move the gas control knob to 'OFF'.
2. Pull off the cover from the control thermostat, disconnect the red wire and pull out from the cable entry.
3. Offer the plastic enclosure box to the heater body as a marking template, as in Fig. 1. Using a pencil, mark through the 4 fixing locations and upon removing the box **carefully** drill 4 holes 3mm in all sites on the outer casing.
4. Secure the enclosure box to the heater using the 4 self-tapping screws provided.
5. Remove the forked connector from the red wire and strip back the insulation about 6mm. Route the wire through the rubber grommet and connect to terminal 6 of the p.c.b. Connect the orange wire via the thermostat cable entry to the terminal vacated by the red wire in the thermostat. See enclosure and gas valve layout Fig 1A.
6. Make the mains electrical connections as follows (See Fig. 2)

a) Connect the incoming mains to N, L and earth block.
b) If a time clock control is required connect to terminals 1 & 2 as shown in Fig. 2.
c) If a remote switch is required remove link from terminals 3 & 4 as shown in Fig. 2.
d) Drill the front foot beneath the enclosure box 4.5mm and locally remove the paint.
e) Using the M4 nut, bolt and washer, secure tightly the earthwire eyelet to the foot.
f) Route the earth wire to the earth block via the rubber grommet.
g) Secure the earth wire to the outer heater casing using the self-adhesive wire clips to ensure a neat vertical route.
h) Replace the enclosure box cover.

B. Test the installation

Upon completion of all installation work, the time control kit operation should be checked as follows:

1. Light the pilot as detailed on the data plate.
2. Rotate the gas control knob to 'ON'.
3. Close the contacts of the time switch.
4. Rotate the thermostat to its highest setting at which point the main burner will light.
5. Open the contacts of the time switch which will shut down the main burner.
6. Set the time control to give the required timings.
7. Set the control thermostat to its required value and replace the cover.
8. Explain to the user, the safe operation of the heater.

Fig. 1

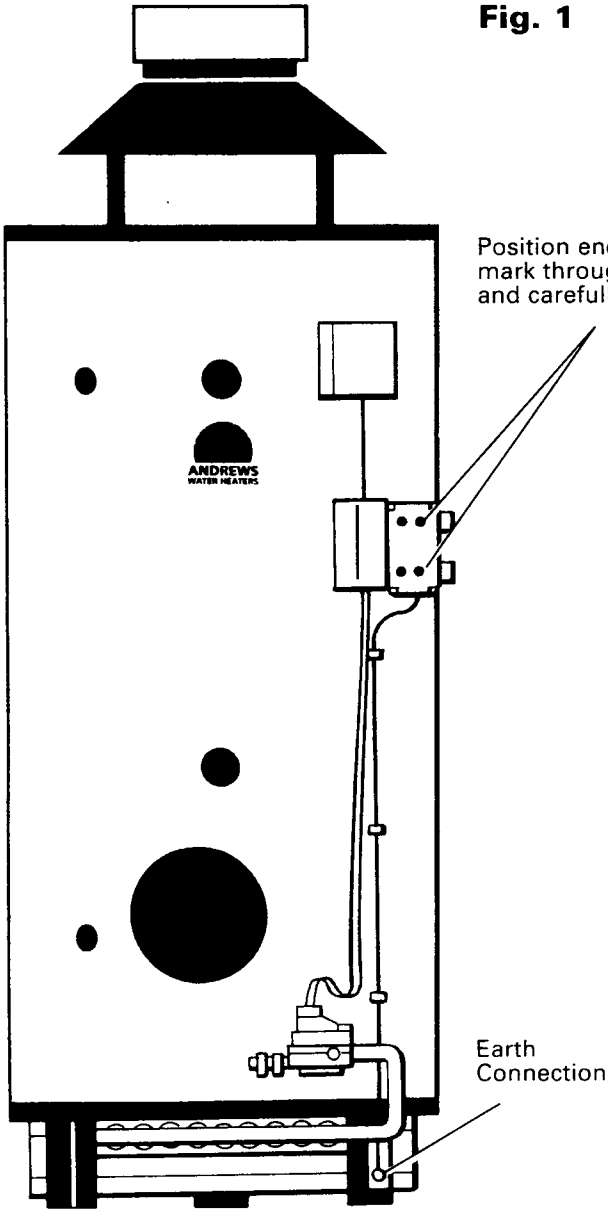

Position enclosure adjacent to thermostat, mark through the 4 fixing points, remove and carefully drill 3mm dia. holes

Earth Connection

Fig. 1A

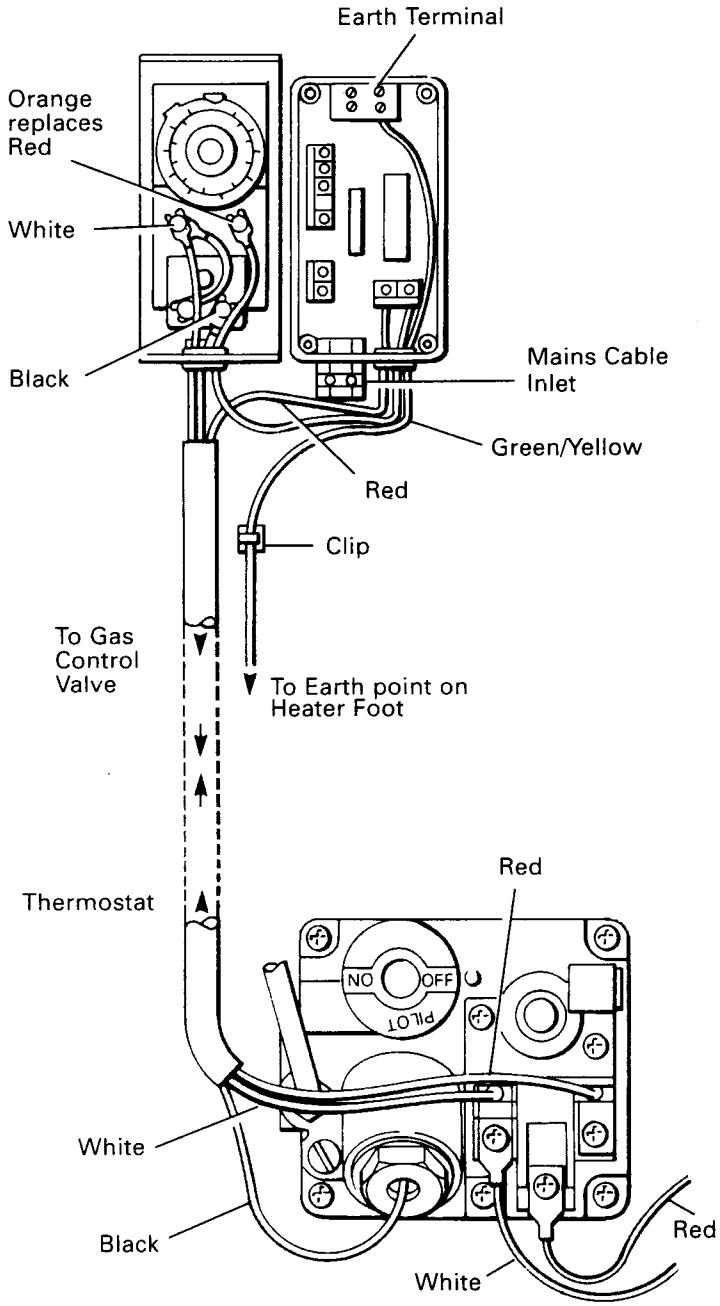

LAYOUT OF PERMANENT PILOT GAS VALVE TERMINAL CONNECTIONS

Fig. 2
WIRING DIAGRAM

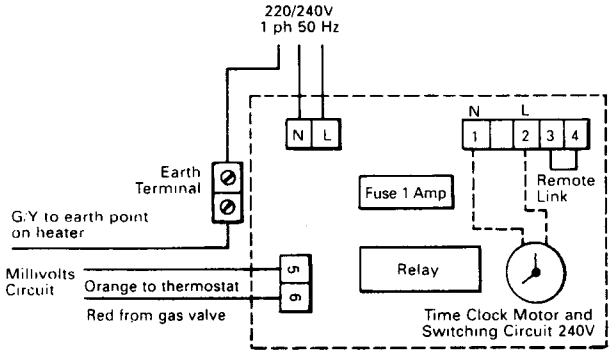

ANDREWS

Andrews Water Heaters
Wood Lane, Erdington
Birmingham B24 9QP
Telephone: 0845 070 1058 Fax: 0845 070 1059
E-mail: andrews@andrews-waterheaters.co.uk

Since it is our policy to strive for progressive design and performance all our equipment is subject to